Base strip - MC 0,5/ 2-G-2,5 THT - 1963421

Please be informed that the data shown in this PDF Document is generated from our Online Catalog. Please find the complete data in the user's documentation. Our General Terms of Use for Downloads are valid (http://download.phoenixcontact.com)



The figure shows a 10-position version of the product

Header, Nominal current: 4 A, Rated voltage (III/2): 160 V, Number of positions: 2, Pitch: 2.5 mm, Color: Black, Contact surface: Tin, Assembly: SMD/THT/THR, User information and design recommendations for through hole reflow technology can be found under “Downloads”

Product Features

- Alternative pin lengths of 1.4 mm or 2.6 mm available on request
- Reel diameter: 330 mm, tape width: 44 mm
- Low-profile THR pin strips with a compact MICRO pitch of 2.5 mm
- Delivery form: box packaging, in bulk for small series
- Delivery form: tape-on-reel packing according to IEC 60286-3 for automated mounting
- Use in SMT reflow processes

Key commercial data

package_quantity	50
GTIN	4017918912253

Technical data

Dimensions

Length	10.1 mm
Height	8.1 mm
Pitch	2.5 mm
Dimension a	2.5 mm
Pin dimensions	0,8 x 0,8 mm
Pin spacing	2.50 mm
Hole diameter	1.4 mm

General

Range of articles	MC 0,5/..-G-THT
Insulating material group	IIIa
Rated surge voltage (III/3)	1.5 kV
Rated surge voltage (III/2)	2.5 kV
Rated surge voltage (II/2)	2.5 kV
Rated voltage (III/3)	32 V
Rated voltage (III/2)	160 V
Rated voltage (II/2)	160 V

Base strip - MC 0,5/ 2-G-2,5 THT - 1963421

Technical data

General

Connection in acc. with standard	EN-VDE
Nominal current I_N	4 A
Maximum load current	4 A
Insulating material	PA
Inflammability class according to UL 94	V0
Color	Black
Number of positions	2

classifications

eCl@ss

eCl@ss 4.0	272607xx
eCl@ss 4.1	27260701
eCl@ss 5.0	27260701
eCl@ss 5.1	27260701
eCl@ss 6.0	27260704
eCl@ss 7.0	27440402
eCl@ss 8.0	27440402

ETIM

ETIM 3.0	EC001121
ETIM 4.0	EC002637
ETIM 5.0	EC002637

UNSPSC

UNSPSC 6.01	30211810
UNSPSC 7.0901	39121409
UNSPSC 11	39121409
UNSPSC 12.01	39121409
UNSPSC 13.2	39121409

approvals

UL Recognized / VDE Gutachten mit Fertigungsüberwachung / cUL Recognized / IECEE CB Scheme / CCA / cULus Recognized /

Approval details

UL Recognized

Usegroups	**B**
Nominal voltage UN	125 V
Nominal current IN	4 A

Base strip - MC 0,5/ 2-G-2,5 THT - 1963421

approvals

Usegroups	B
mm²/AWG/kcmil	

VDE Gutachten mit Fertigungsüberwachung

Nominal voltage UN	32 V
Nominal current IN	4 A
mm²/AWG/kcmil	

cUL Recognized

Usegroups	B
Nominal voltage UN	125 V
Nominal current IN	4 A
mm²/AWG/kcmil	

IECEE CB Scheme

Nominal voltage UN	32 V
Nominal current IN	4 A
mm²/AWG/kcmil	

CCA

Nominal voltage UN	32 V
Nominal current IN	4 A
mm²/AWG/kcmil	

cULus Recognized

accessories

Coding element

Base strip - MC 0,5/ 2-G-2,5 THT - 1963421

accessories

CP-MC 0,5 - 1881435



Labeled terminal marker

SK 2,54/2,8:FORTL.ZAHLEN - 0804853



Drawings

Base strip - MC 0,5/ 2-G-2,5 THT - 1963421

Drilling diagram

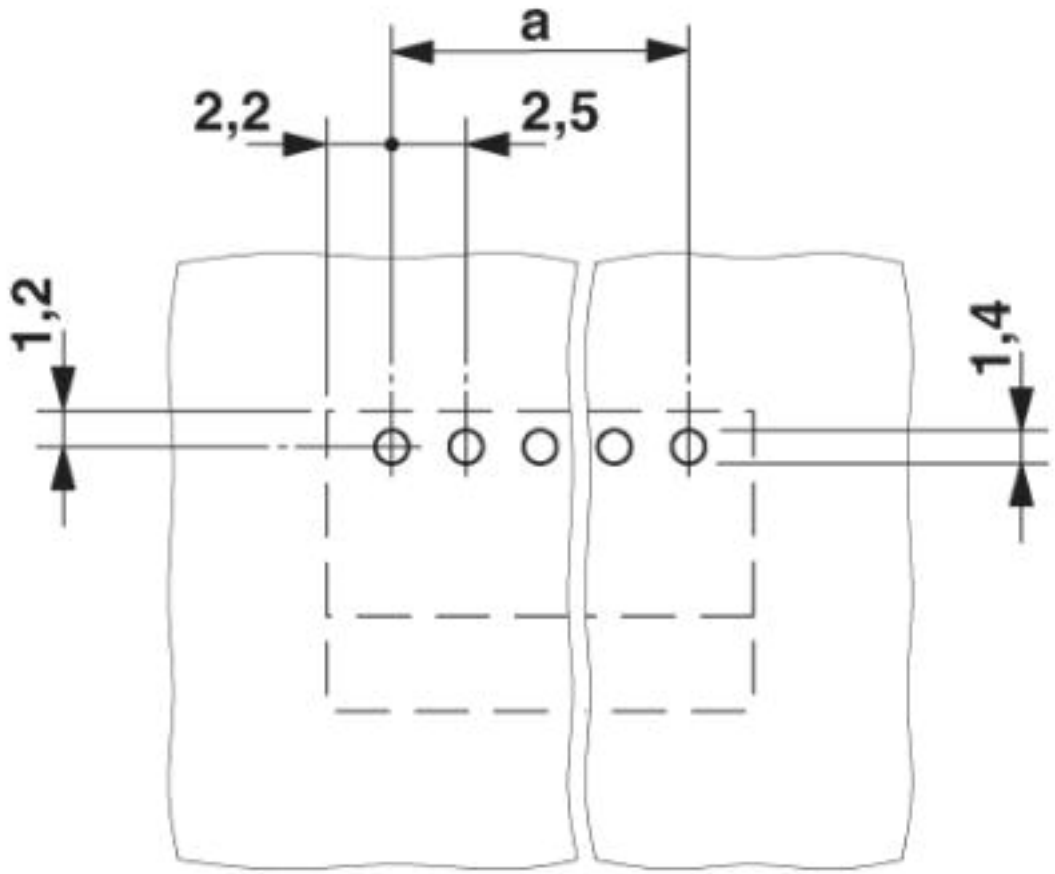

Dimensioned drawing

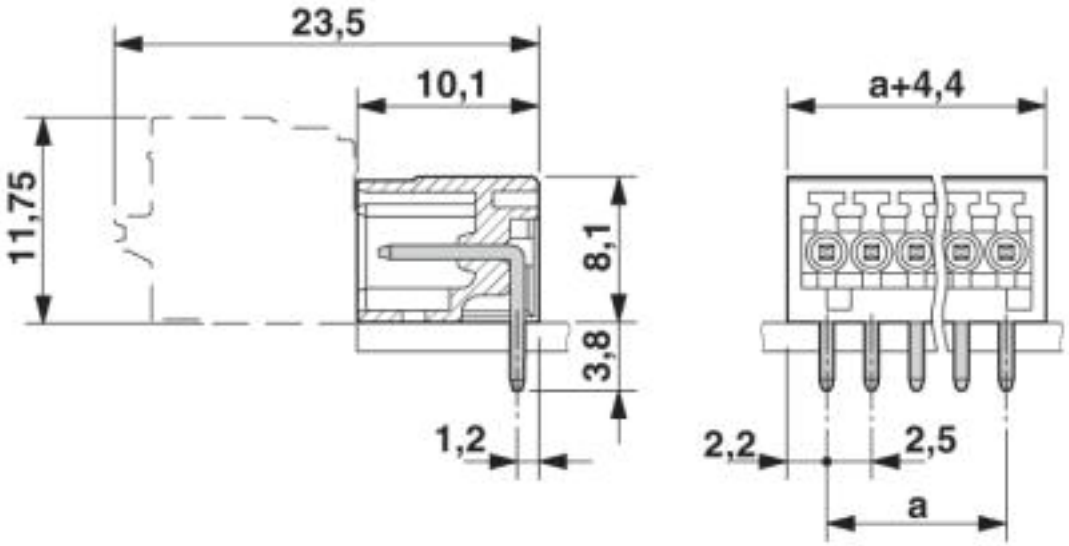

Base strip - MC 0,5/ 2-G-2,5 THT - 1963421

Dimensioned drawing

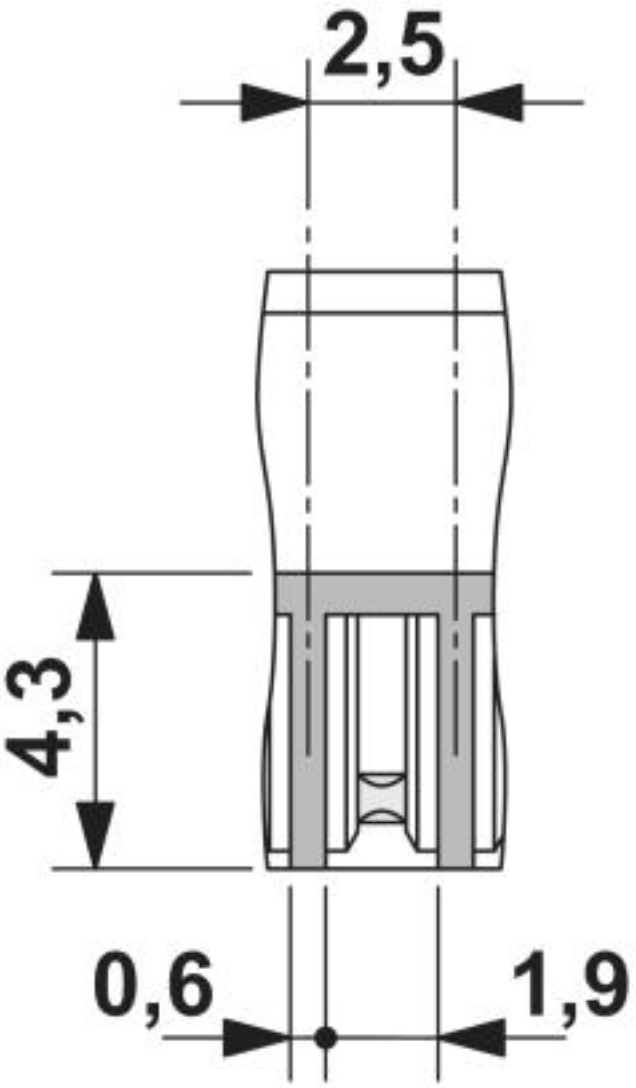

© Phoenix Contact 2013 - all rights reserved
http://www.phoenixcontact.com