Printed-circuit board connector - FKCN 2,5/ 6-ST - 1732784

Please be informed that the data shown in this PDF Document is generated from our Online Catalog. Please find the complete data in the user's documentation. Our General Terms of Use for Downloads are valid (http://download.phoenixcontact.com)



The figure shows a 10-position version of the product

Plug component, Nominal current: 12 A, Rated voltage (III/2): 320 V, Number of positions: 6, Pitch: 5 mm, Connection method: Spring-cage conn., Color: green, Contact surface: Tin

Product Features

- Maximum contact and packing density in combination with double-level CCDN 2,5 headers
- User-friendly actuation of the terminal point using a screwdriver
- Plug-in direction parallel to the conductor axis
- Wiring space for conductor cross sections up to 2.5 mm²
- Ultra-flat design height of just 10.9 mm
- Fast conductor connection thanks to Push-in spring-cage connection

Key commercial data

package_quantity	50
GTIN	4046356163774

Technical data

Dimensions

Pitch	5 mm
Dimension a	25 mm

General

Range of articles	FKCN 2,5/..-ST
Insulating material group	I
Rated surge voltage (III/3)	4 kV
Rated surge voltage (III/2)	4 kV
Rated surge voltage (II/2)	4 kV
Rated voltage (III/3)	320 V
Rated voltage (III/2)	320 V
Rated voltage (II/2)	630 V
Connection in acc. with standard	EN-VDE
Nominal current I_N	12 A
Nominal cross section	2.5 mm²
Maximum load current	12 A
Insulating material	PBT

Printed-circuit board connector - FKCN 2,5/ 6-ST - 1732784

Technical data

General

Inflammability class according to UL 94	V0
Stripping length	10 mm
Number of positions	6

Connection data

Conductor cross section solid min.	0.2 mm²
Conductor cross section solid max.	1.5 mm²
Conductor cross section stranded min.	0.2 mm²
Conductor cross section stranded max.	2.5 mm²
Conductor cross section stranded, with ferrule without plastic sleeve min.	0.25 mm²
Conductor cross section stranded, with ferrule without plastic sleeve max.	1.5 mm²
Conductor cross section stranded, with ferrule with plastic sleeve min.	0.25 mm²
Conductor cross section stranded, with ferrule with plastic sleeve max.	1.5 mm²
Conductor cross section AWG/kcmil min.	24
Conductor cross section AWG/kcmil max	16

classifications

eCl@ss

eCl@ss 4.0	272607xx
eCl@ss 4.1	27260701
eCl@ss 5.0	27260701
eCl@ss 5.1	27260701
eCl@ss 6.0	27260704
eCl@ss 7.0	27440402
eCl@ss 8.0	27440402

ETIM

ETIM 3.0	EC001121
ETIM 4.0	EC002638
ETIM 5.0	EC002638

UNSPSC

UNSPSC 6.01	30211810
UNSPSC 7.0901	39121409
UNSPSC 11	39121409
UNSPSC 12.01	39121409
UNSPSC 13.2	39121409

Printed-circuit board connector - FKCN 2,5/ 6-ST - 1732784

approvals

GOST / GOST /

Approval details

GOST

Drawings

Dimensioned drawing

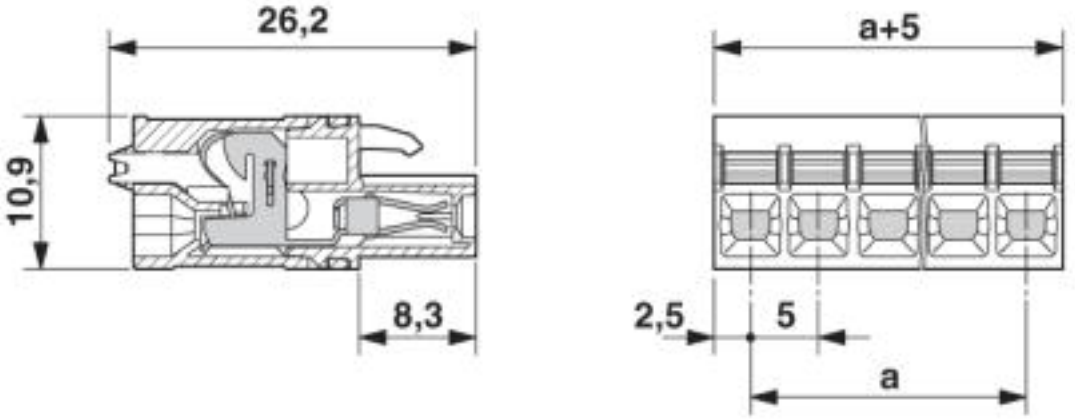

© Phoenix Contact 2013 - all rights reserved
http://www.phoenixcontact.com