Plug-in block - UMSTBVK 2,5/ 9-GF-5,08 - 1787995

Please be informed that the data shown in this PDF Document is generated from our Online Catalog. Please find the complete data in the user's documentation. Our General Terms of Use for Downloads are valid (http://download.phoenixcontact.com)



The figure shows a 10-position version of the product

Plug component, Nominal current: 12 A, Rated voltage (III/2): 320 V, Number of positions: 9, Pitch: 5.08 mm, Connection method: Screw connection, Color: green, Contact surface: Tin, Assembly: DIN rail

Product Features

- Can be combined with COMBICON plugs with 5.08 mm pitch
- With universal foot for mounting on NS 32 or NS 35 DIN rails

Key commercial data

package_quantity	50
GTIN	4017918043056

Technical data

Dimensions

Width	42.5 mm
Pitch	5.08 mm
Dimension a	40.64 mm

General

Range of articles	UMSTBVK 2,5/..-GF
Insulating material group	I
Rated surge voltage (III/3)	4 kV
Rated surge voltage (III/2)	4 kV
Rated surge voltage (II/2)	4 kV
Rated voltage (III/3)	320 V
Rated voltage (III/2)	320 V
Rated voltage (II/2)	630 V
Connection in acc. with standard	EN-VDE
Nominal current I_N	12 A
Nominal cross section	2.5 mm²
Maximum load current	12 A
Insulating material	PA
Inflammability class according to UL 94	V0
Internal cylindrical gage	A3
Stripping length	7 mm

Plug-in block - UMSTBVK 2,5/ 9-GF-5,08 - 1787995

Technical data

General

Number of positions	9
Screw thread	M3
Tightening torque, min	0.5 Nm
Tightening torque max	0.6 Nm

Connection data

Conductor cross section solid min.	0.2 mm²
Conductor cross section solid max.	2.5 mm²
Conductor cross section stranded min.	0.2 mm²
Conductor cross section stranded max.	2.5 mm²
Conductor cross section stranded, with ferrule without plastic sleeve min.	0.25 mm²
Conductor cross section stranded, with ferrule without plastic sleeve max.	2.5 mm²
Conductor cross section stranded, with ferrule with plastic sleeve min.	0.25 mm²
Conductor cross section stranded, with ferrule with plastic sleeve max.	2.5 mm²
Conductor cross section AWG/kcmil min.	24
Conductor cross section AWG/kcmil max	12
2 conductors with same cross section, solid min.	0.2 mm²
2 conductors with same cross section, solid max.	1 mm²
2 conductors with same cross section, stranded min.	0.2 mm²
2 conductors with same cross section, stranded max.	1.5 mm²
2 conductors with same cross section, stranded, ferrules without plastic sleeve, min.	0.25 mm²
2 conductors with same cross section, stranded, ferrules without plastic sleeve, max.	1 mm²
2 conductors with same cross section, stranded, TWIN ferrules with plastic sleeve, min.	0.5 mm²
2 conductors with same cross section, stranded, TWIN ferrules with plastic sleeve, max.	1.5 mm²
Minimum AWG according to UL/CUL	30
Maximum AWG according to UL/CUL	12

classifications

eCl@ss

eCl@ss 4.0	272607xx
eCl@ss 4.1	27260701
eCl@ss 5.0	27260701
eCl@ss 5.1	27260701
eCl@ss 6.0	27260704
eCl@ss 7.0	27440402
eCl@ss 8.0	27440402

Plug-in block - UMSTBVK 2,5/ 9-GF-5,08 - 1787995

classifications

ETIM

ETIM 3.0	EC001121
ETIM 4.0	EC002637
ETIM 5.0	EC001284

UNSPSC

UNSPSC 6.01	30211810
UNSPSC 7.0901	39121409
UNSPSC 11	39121409
UNSPSC 12.01	39121409
UNSPSC 13.2	39121409

approvals

CSA / UL Recognized / VDE Gutachten mit Fertigungsüberwachung / cUL Recognized / GOST / IECEE CB Scheme / GOST / CCA / cULus Recognized /

Approval details

CSA

Usegroups	**B**	**D**
Nominal voltage UN	300 V	300 V
Nominal current IN	10 A	10 A
mm²/AWG/kcmil	28-12	28-12

UL Recognized

Usegroups	**B**	**D**
Nominal voltage UN	250 V	300 V
Nominal current IN	12 A	10 A
mm²/AWG/kcmil	30-12	30-12

VDE Gutachten mit Fertigungsüberwachung

Nominal voltage UN	250 V
Nominal current IN	12 A
mm²/AWG/kcmil	0.2-2.5

Plug-in block - UMSTBVK 2,5/ 9-GF-5,08 - 1787995

approvals

cUL Recognized

Usegroups	B	D
Nominal voltage UN	250 V	300 V
Nominal current IN	12 A	10 A
mm²/AWG/kcmil	30-12	30-12

GOST

IECEE CB Scheme

Nominal voltage UN	250 V
Nominal current IN	12 A
mm²/AWG/kcmil	0.2-2.5

CCA

Nominal voltage UN	250 V
Nominal current IN	12 A
mm²/AWG/kcmil	0.2-2.5

cULus Recognized

accessories

Labeled terminal marker

SK 5,08/3,8:FORTL.ZAHLEN - 0804293



Plug-in block - UMSTBVK 2,5/ 9-GF-5,08 - 1787995

accessories

Coding element

CR-MSTB - 1734401



Filler plug

MSTB-BL - 1755477



Screwdriver tools

SZS 0,6X3,5 - 1205053



Bridge

EBP 2- 5 - 1733169



Drawings

Plug-in block - UMSTBVK 2,5/ 9-GF-5,08 - 1787995

Dimensioned drawing

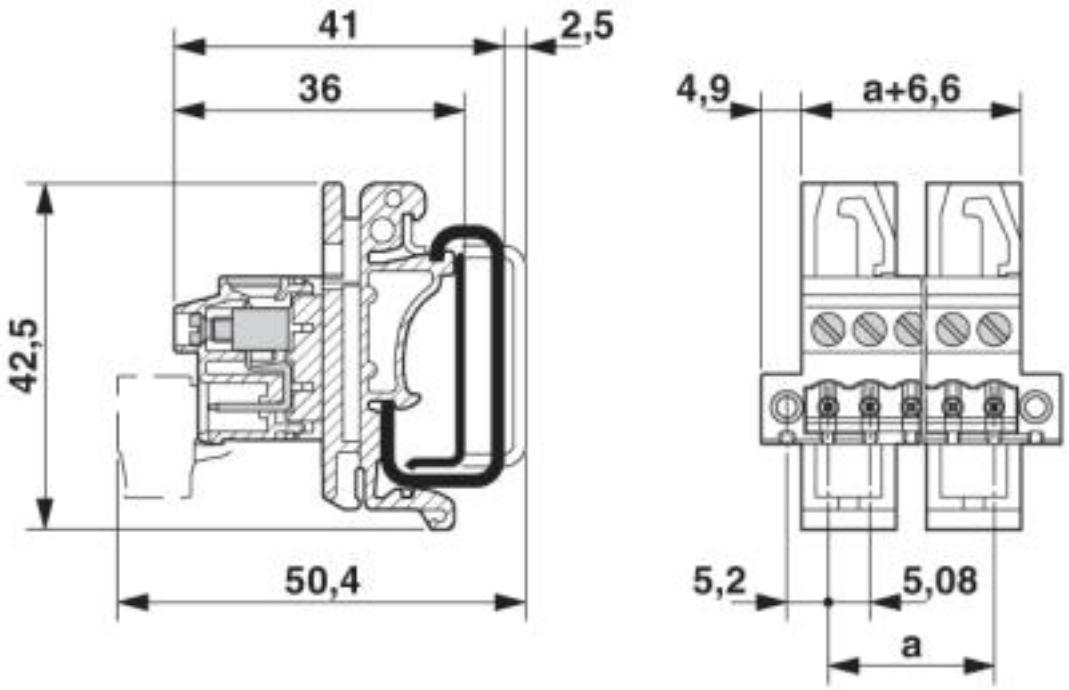

© Phoenix Contact 2013 - all rights reserved
http://www.phoenixcontact.com