# Printed-circuit board connector - MSTBT 2,5/ 2-STF-5,08 - 1805301

Please be informed that the data shown in this PDF Document is generated from our Online Catalog. Please find the complete data in the user's documentation. Our General Terms of Use for Downloads are valid (http://download.phoenixcontact.com)



The figure shows a 10-position version of the product

Plug component, Nominal current: 12 A, Rated voltage (III/2): 320 V, Number of positions: 2, Pitch: 5.08 mm, Connection method: Screw connection, Color: green, Contact surface: Tin

## Product Features

- The cable connection area for MSTBT 2,5/... is positioned lower than that of MSTB 2,5/...
- Plug-in direction parallel to the conductor axis

## Key commercial data

| | |
|---|---|
| **package_quantity** | 50 |
| **GTIN** | 4017918046453 |

## Technical data

### Dimensions

| | |
|---|---|
| **Pitch** | 5.08 mm |
| **Dimension a** | 5.08 mm |

### General

| | |
|---|---|
| **Range of articles** | MSTBT 2,5/..-STF |
| **Insulating material group** | I |
| **Rated surge voltage (III/3)** | 4 kV |
| **Rated surge voltage (III/2)** | 4 kV |
| **Rated surge voltage (II/2)** | 4 kV |
| **Rated voltage (III/3)** | 250 V |
| **Rated voltage (III/2)** | 320 V |
| **Rated voltage (II/2)** | 630 V |
| **Connection in acc. with standard** | EN-VDE |
| **Nominal current $I_N$** | 12 A |
| **Nominal cross section** | 2.5 mm² |
| **Maximum load current** | 12 A (with 2.5 mm² conductor cross section) |
| **Insulating material** | PA |
| **Inflammability class according to UL 94** | V0 |
| **Internal cylindrical gage** | A3 |
| **Stripping length** | 7 mm |
| **Number of positions** | 2 |

# Printed-circuit board connector - MSTBT 2,5/ 2-STF-5,08 - 1805301

## Technical data

### General

| | |
|---|---|
| **Screw thread** | M3 |
| **Tightening torque, min** | 0.5 Nm |
| **Tightening torque max** | 0.6 Nm |

### Connection data

| | |
|---|---|
| **Conductor cross section solid min.** | 0.2 mm² |
| **Conductor cross section solid max.** | 2.5 mm² |
| **Conductor cross section stranded min.** | 0.2 mm² |
| **Conductor cross section stranded max.** | 2.5 mm² |
| **Conductor cross section stranded, with ferrule without plastic sleeve min.** | 0.25 mm² |
| **Conductor cross section stranded, with ferrule without plastic sleeve max.** | 2.5 mm² |
| **Conductor cross section stranded, with ferrule with plastic sleeve min.** | 0.25 mm² |
| **Conductor cross section stranded, with ferrule with plastic sleeve max.** | 1.5 mm² |
| **Conductor cross section AWG/kcmil min.** | 24 |
| **Conductor cross section AWG/kcmil max** | 12 |
| **2 conductors with same cross section, solid min.** | 0.2 mm² |
| **2 conductors with same cross section, solid max.** | 1 mm² |
| **2 conductors with same cross section, stranded min.** | 0.2 mm² |
| **2 conductors with same cross section, stranded max.** | 1.5 mm² |
| **2 conductors with same cross section, stranded, ferrules without plastic sleeve, min.** | 0.25 mm² |
| **2 conductors with same cross section, stranded, ferrules without plastic sleeve, max.** | 1 mm² |
| **2 conductors with same cross section, stranded, TWIN ferrules with plastic sleeve, min.** | 0.5 mm² |
| **2 conductors with same cross section, stranded, TWIN ferrules with plastic sleeve, max.** | 1.5 mm² |
| **Minimum AWG according to UL/CUL** | 30 |
| **Maximum AWG according to UL/CUL** | 12 |

## classifications

### eCl@ss

| | |
|---|---|
| **eCl@ss 4.0** | 272607xx |
| **eCl@ss 4.1** | 27260701 |
| **eCl@ss 5.0** | 27260701 |
| **eCl@ss 5.1** | 27260701 |
| **eCl@ss 6.0** | 27260704 |
| **eCl@ss 7.0** | 27440402 |
| **eCl@ss 8.0** | 27440402 |

# Printed-circuit board connector - MSTBT 2,5/ 2-STF-5,08 - 1805301

## classifications

### ETIM

| | |
|---|---|
| **ETIM 3.0** | EC001121 |
| **ETIM 4.0** | EC002638 |
| **ETIM 5.0** | EC002638 |

### UNSPSC

| | |
|---|---|
| **UNSPSC 6.01** | 30211810 |
| **UNSPSC 7.0901** | 39121409 |
| **UNSPSC 11** | 39121409 |
| **UNSPSC 12.01** | 39121409 |
| **UNSPSC 13.2** | 39121409 |

## approvals

CSA / VDE Gutachten mit Fertigungsüberwachung / GOST / IECEE CB Scheme / GOST / UL Recognized / cUL Recognized / CCA / cULus Recognized /

### Approval details

**CSA**

| **Usegroups** | **B** | **D** |
|---|---|---|
| Nominal voltage UN | 300 V | 300 V |
| Nominal current IN | 10 A | 10 A |
| mm²/AWG/kcmil | 28-12 | 28-12 |

**VDE Gutachten mit Fertigungsüberwachung**

| | |
|---|---|
| Nominal voltage UN | 250 V |
| Nominal current IN | 12 A |
| mm²/AWG/kcmil | 0.2-2.5 |

**GOST**

**IECEE CB Scheme**

| | |
|---|---|
| Nominal voltage UN | 250 V |

# Printed-circuit board connector - MSTBT 2,5/ 2-STF-5,08 - 1805301

## approvals

| | |
|---|---|
| Nominal current IN | 12 A |
| mm²/AWG/kcmil | 0.2-2.5 |

**UL Recognized**

| Usegroups | B | D |
|---|---|---|
| Nominal voltage UN | 300 V | 300 V |
| Nominal current IN | 15 A | 10 A |
| mm²/AWG/kcmil | 30-12 | 30-12 |

**cUL Recognized**

| Usegroups | B | D |
|---|---|---|
| Nominal voltage UN | 300 V | 300 V |
| Nominal current IN | 15 A | 10 A |
| mm²/AWG/kcmil | 30-12 | 30-12 |

**CCA**

| | |
|---|---|
| Nominal voltage UN | 250 V |
| Nominal current IN | 12 A |
| mm²/AWG/kcmil | 0.2-2.5 |

**cULus Recognized**

## accessories

### Screwdriver tools

SZS 0,6X3,5 - 1205053



# Printed-circuit board connector - MSTBT 2,5/ 2-STF-5,08 - 1805301

## accessories

**Labeled terminal marker**

SK 5,08/3,8:FORTL.ZAHLEN - 0804293



**Coding element**

CP-MSTB - 1734634



**Bridge**

EBP 2- 5 - 1733169



## Drawings

# Printed-circuit board connector - MSTBT 2,5/ 2-STF-5,08 - 1805301

Dimensioned drawing

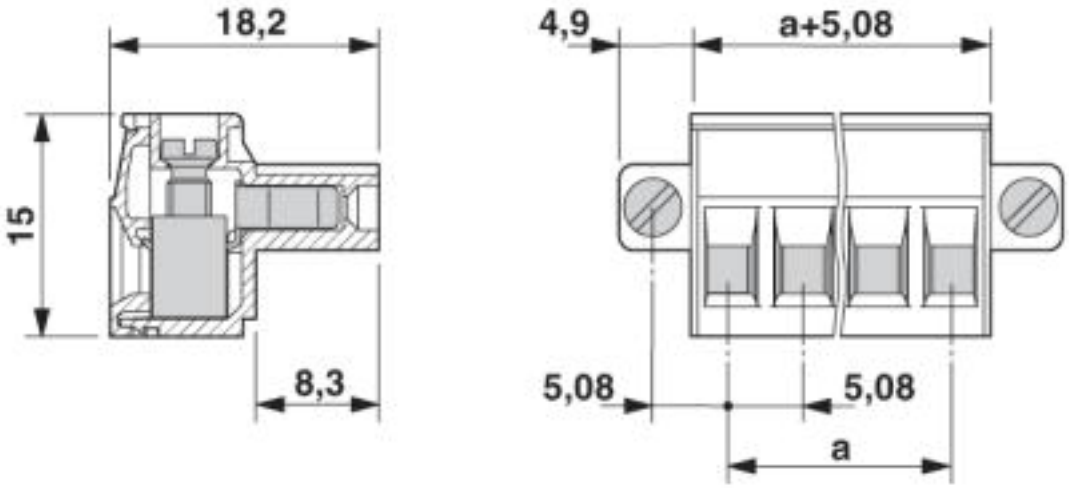


© Phoenix Contact 2013 - all rights reserved
http://www.phoenixcontact.com