# PCB terminal block - MFKDSP/ 3-5,08 - 1790296

Please be informed that the data shown in this PDF Document is generated from our Online Catalog. Please find the complete data in the user's documentation. Our General Terms of Use for Downloads are valid (http://download.phoenixcontact.com)



The illustration shows the 5-pos. version

PCB terminal block, Nominal current: 12 A, Nom. voltage: 320 V, Pitch: 5.08 mm, Number of positions: 3, Connection method: Spring-cage conn., Mounting: Soldering, Conductor/PCB connection direction: 45 °, Color: green

## Key commercial data

| | |
|---|---|
| **package_quantity** | 50 |
| **GTIN** | 4017918044220 |

## Technical data

### Dimensions

| | |
|---|---|
| **Length** | 16.2 mm |
| **Pitch** | 5.08 mm |
| **Dimension a** | 10.16 mm |
| **Pin dimensions** | 0,5 x 1 mm |
| **Hole diameter** | 1.3 mm |

### General

| | |
|---|---|
| **Range of articles** | MFKDSP |
| **Insulating material group** | I |
| **Rated surge voltage (III/3)** | 4 kV |
| **Rated surge voltage (III/2)** | 4 kV |
| **Rated surge voltage (II/2)** | 4 kV |
| **Rated voltage (III/3)** | 250 V |
| **Rated voltage (III/2)** | 320 V |
| **Rated voltage (II/2)** | 630 V |
| **Connection in acc. with standard** | EN-VDE |
| **Nominal current $I_N$** | 12 A |
| **Nominal cross section** | 1 mm² |
| **Maximum load current** | 12 A (with 1.5 mm² conductor cross section) |
| **Insulating material** | PA |
| **Solder pin surface** | Sn |
| **Inflammability class according to UL 94** | V0 |
| **Stripping length** | 10 mm |
| **Number of positions** | 3 |

# PCB terminal block - MFKDSP/ 3-5,08 - 1790296

## Technical data

### Connection data

| | |
|---|---|
| **Conductor cross section solid min.** | 0.2 mm² |
| **Conductor cross section solid max.** | 1.5 mm² |
| **Conductor cross section stranded min.** | 0.2 mm² |
| **Conductor cross section stranded max.** | 1 mm² |
| **Conductor cross section stranded, with ferrule without plastic sleeve min.** | 0.25 mm² |
| **Conductor cross section stranded, with ferrule without plastic sleeve max.** | 0.75 mm² |
| **Conductor cross section stranded, with ferrule with plastic sleeve min.** | 0.25 mm² |
| **Conductor cross section stranded, with ferrule with plastic sleeve max.** | 0.75 mm² |
| **Conductor cross section AWG/kcmil min.** | 24 |
| **Conductor cross section AWG/kcmil max** | 16 |
| **Minimum AWG according to UL/CUL** | 22 |
| **Maximum AWG according to UL/CUL** | 18 |

## classifications

### eCl@ss

| | |
|---|---|
| **eCl@ss 4.0** | 27141109 |
| **eCl@ss 4.1** | 27141109 |
| **eCl@ss 5.0** | 27141190 |
| **eCl@ss 5.1** | 27141190 |
| **eCl@ss 6.0** | 27261101 |
| **eCl@ss 7.0** | 27440401 |
| **eCl@ss 8.0** | 27440401 |

### ETIM

| | |
|---|---|
| **ETIM 3.0** | EC001121 |
| **ETIM 4.0** | EC002643 |
| **ETIM 5.0** | EC002643 |

### UNSPSC

| | |
|---|---|
| **UNSPSC 6.01** | 30211801 |
| **UNSPSC 7.0901** | 39121432 |
| **UNSPSC 11** | 39121432 |
| **UNSPSC 12.01** | 39121432 |
| **UNSPSC 13.2** | 39121432 |

## approvals

CSA / UL Recognized / cUL Recognized / GOST / GOST / cULus Recognized /

# PCB terminal block - MFKDSP/ 3-5,08 - 1790296

## approvals

Approval details

**CSA**

| Usegroups | B | D |
|---|---|---|
| Nominal voltage UN | 300 V | 300 V |
| Nominal current IN | 10 A | 10 A |
| mm²/AWG/kcmil | 22-18 | 22-18 |

**UL Recognized**

| Usegroups | B | D |
|---|---|---|
| Nominal voltage UN | 300 V | 300 V |
| Nominal current IN | 3.6 A | 3.6 A |
| mm²/AWG/kcmil | 22-18 | 22-18 |

**cUL Recognized**

| Usegroups | B | D |
|---|---|---|
| Nominal voltage UN | 300 V | 300 V |
| Nominal current IN | 3.6 A | 3.6 A |
| mm²/AWG/kcmil | 22-18 | 22-18 |

**GOST**

**cULus Recognized**

## accessories

**Test plug terminal block**

# PCB terminal block - MFKDSP/ 3-5,08 - 1790296

## accessories

RPS - 0201647



MPS-MT - 0201744



**Labeled terminal marker**

SK 5,08/3,8:FORTL.ZAHLEN - 0804293



## Drawings

# PCB terminal block - MFKDSP/ 3-5,08 - 1790296

Drilling diagram

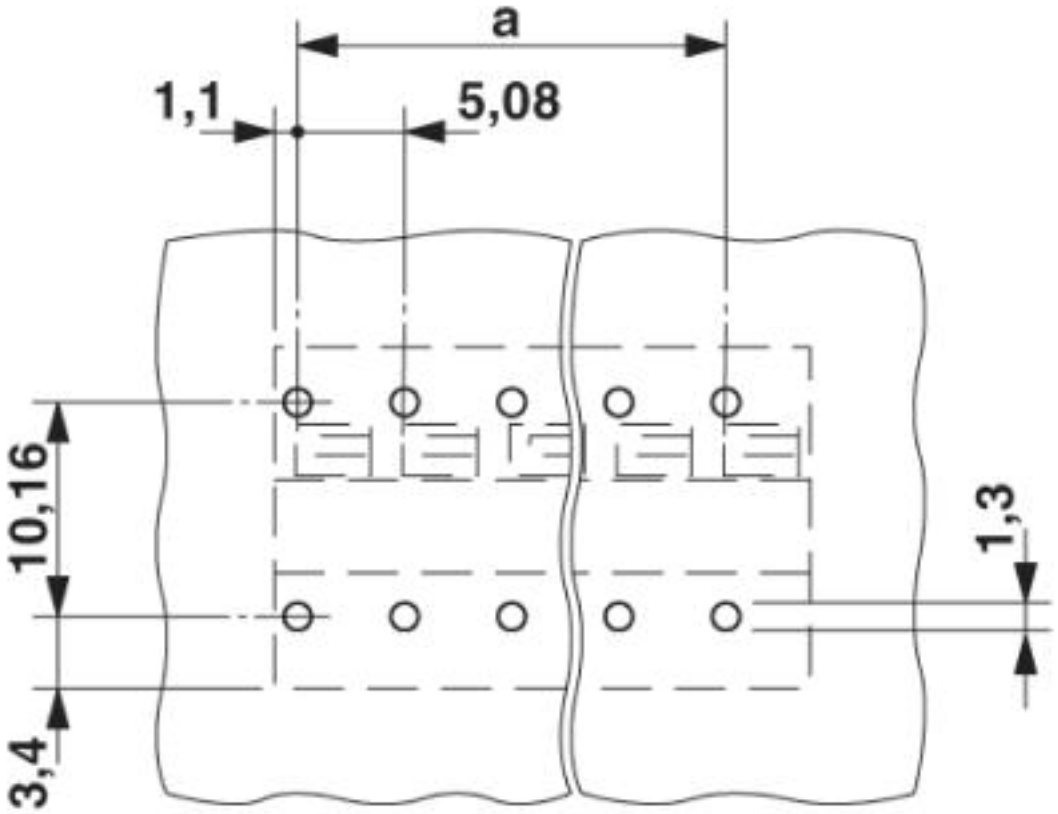


Dimensioned drawing

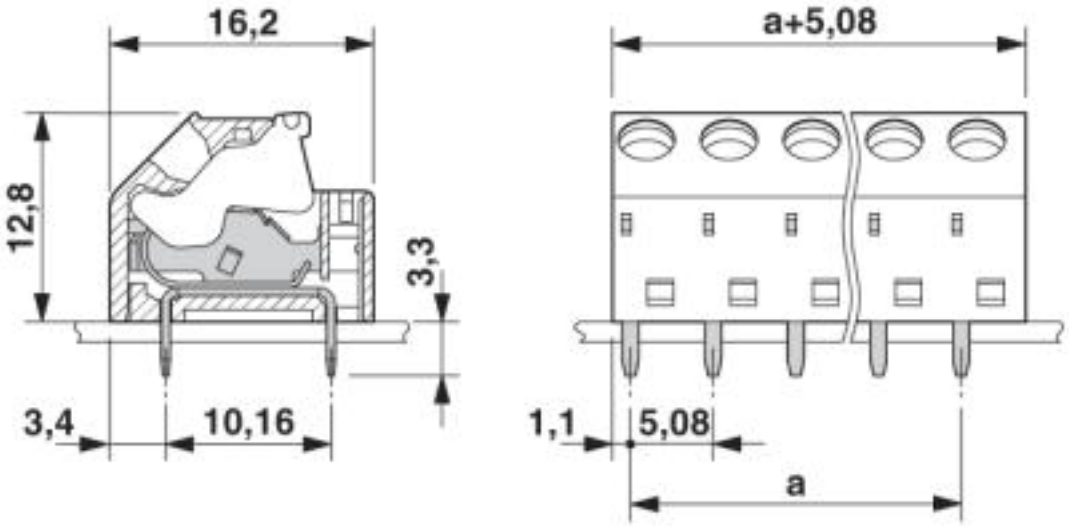


© Phoenix Contact 2013 - all rights reserved
http://www.phoenixcontact.com