Base strip - GIC 2,5/ 2-GF-7,62 - 1858989

Please be informed that the data shown in this PDF Document is generated from our Online Catalog. Please find the complete data in the user's documentation. Our General Terms of Use for Downloads are valid (http://download.phoenixcontact.com)



The figure shows a 10-position version of the product

Header, Nominal current: 12 A, Rated voltage (III/2): 630 V, Number of positions: 2, Pitch: 7.62 mm, Color: green, Contact surface: Tin, Assembly: Soldering

Product Features

- Combination with GMSTB 2,5 headers for primary/secondary/PCB connection
- Pairs of guide rails can be used as a 90° board-to-board connection
- Use in shock-proof applications up to 630 V (III/2)
- Clear separation of PCB inputs/outputs

Key commercial data

package_quantity	50
GTIN	4017918106041

Technical data

Dimensions

Length	19 mm
Pitch	7.62 mm
Dimension a	7.62 mm
Pin dimensions	1,2 x 0,5
Hole diameter	1.4 mm

General

Range of articles	GIC 2,5/..-GF
Insulating material group	I
Rated surge voltage (III/3)	6 kV
Rated surge voltage (III/2)	6 kV
Rated surge voltage (II/2)	6 kV
Rated voltage (III/3)	500 V
Rated voltage (III/2)	630 V
Rated voltage (II/2)	1000 V
Connection in acc. with standard	EN-VDE
Nominal current I_N	12 A
Maximum load current	12 A
Insulating material	PA

Base strip - GIC 2,5/ 2-GF-7,62 - 1858989

Technical data

General

Inflammability class according to UL 94	V0
Color	green
Number of positions	2

classifications

eCl@ss

eCl@ss 4.0	272607xx
eCl@ss 4.1	27260701
eCl@ss 5.0	27260701
eCl@ss 5.1	27260701
eCl@ss 6.0	27260704
eCl@ss 7.0	27440402
eCl@ss 8.0	27440402

ETIM

ETIM 3.0	EC001121
ETIM 4.0	EC002637
ETIM 5.0	EC002637

UNSPSC

UNSPSC 6.01	30211810
UNSPSC 7.0901	39121409
UNSPSC 11	39121409
UNSPSC 12.01	39121409
UNSPSC 13.2	39121409

approvals

CSA / UL Recognized / VDE Gutachten mit Fertigungsüberwachung / cUL Recognized / GOST / IECEE CB Scheme / GOST / CCA / cULus Recognized /

Approval details

CSA

Usegroups	**B**	**D**
Nominal voltage UN	300 V	300 V
Nominal current IN	10 A	10 A
mm²/AWG/kcmil		

Base strip - GIC 2,5/ 2-GF-7,62 - 1858989

approvals

UL Recognized

Usegroups	B	D
Nominal voltage UN	250 V	300 V
Nominal current IN	12 A	10 A
mm²/AWG/kcmil		

VDE Gutachten mit Fertigungsüberwachung

Nominal voltage UN	400 V
Nominal current IN	12 A
mm²/AWG/kcmil	

cUL Recognized

Usegroups	B	D
Nominal voltage UN	250 V	300 V
Nominal current IN	12 A	10 A
mm²/AWG/kcmil		

GOST

IECEE CB Scheme

Nominal voltage UN	400 V
Nominal current IN	12 A
mm²/AWG/kcmil	

CCA

Nominal voltage UN	400 V

Base strip - GIC 2,5/ 2-GF-7,62 - 1858989

approvals

Nominal current IN	12 A
mm²/AWG/kcmil	

cULus Recognized

accessories

Test plug terminal block

MPS-MT - 0201744



RPS - 0201647



Coding element

CP-MSTB - 1734634



Labeled terminal marker

SK 7,62/3,8:FORTL.ZAHLEN - 0804549



Base strip - GIC 2,5/ 2-GF-7,62 - 1858989

Drawings

Drilling diagram

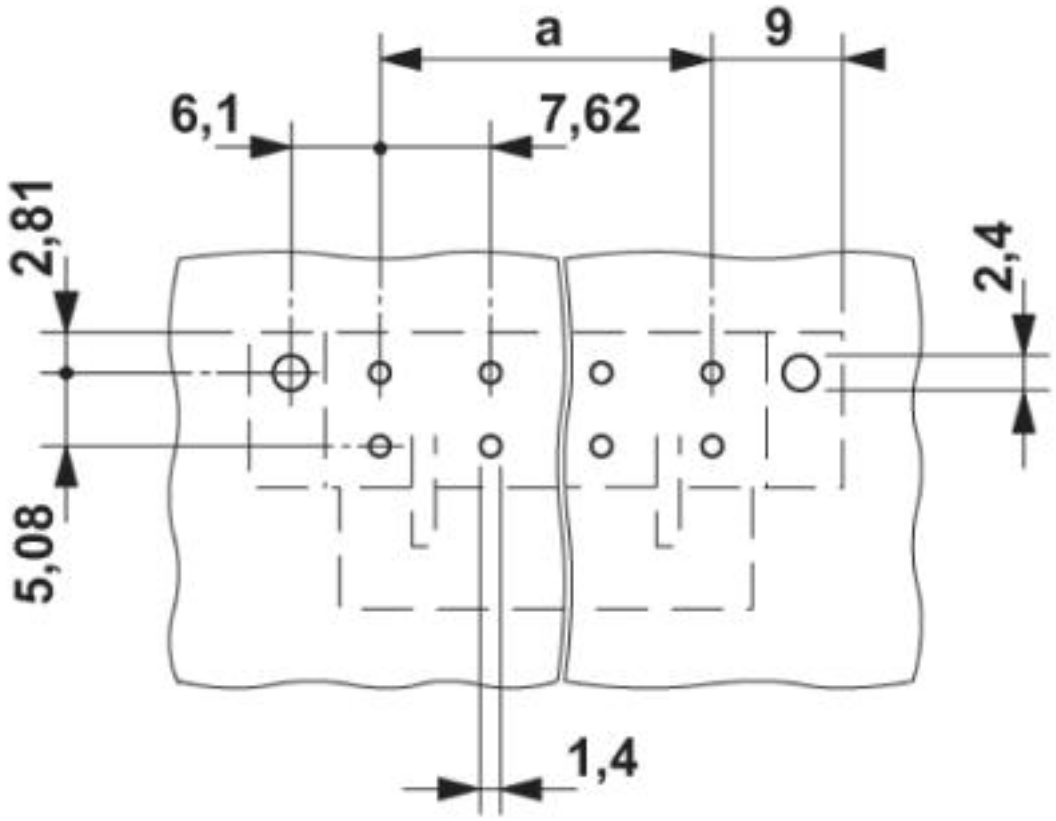

Dimensioned drawing

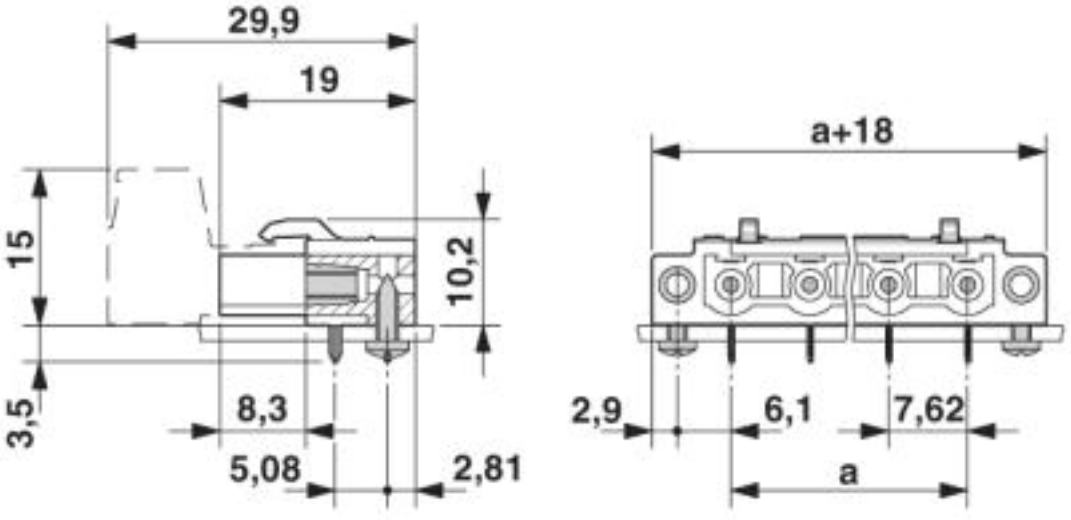

© Phoenix Contact 2013 - all rights reserved
http://www.phoenixcontact.com