Printed-circuit board connector - FKC 2,5/15-ST-5,08 - 1873184

Please be informed that the data shown in this PDF Document is generated from our Online Catalog. Please find the complete data in the user's documentation. Our General Terms of Use for Downloads are valid (http://download.phoenixcontact.com)

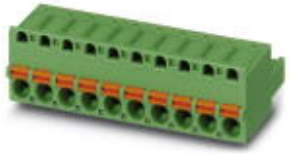

The figure shows a 10-position version of the product

Plug component, Nominal current: 12 A, Rated voltage (III/2): 320 V, Number of positions: 15, Pitch: 5.08 mm, Connection method: Spring-cage conn., Color: green, Contact surface: Tin

Product Features

- Can be combined with the MSTB 2,5 range
- For larger numbers of positions up to 24-pos., visit: phoenixcontact.net/products
- Fast conductor connection thanks to Push-in spring-cage connection
- Contacting of solid or stranded conductors with ferrules without actuating the opening lever directly in the terminal point
- Two test connections for accommodating 2 mm Ø test pins or 2.3 mm Ø test plug

Key commercial data

package_quantity	50
GTIN	4017918142575

Technical data

Dimensions

Pitch	5.08 mm
Dimension a	71.12 mm

General

Range of articles	FKC 2,5/..-ST
Insulating material group	I
Rated surge voltage (III/3)	4 kV
Rated surge voltage (III/2)	4 kV
Rated surge voltage (II/2)	4 kV
Rated voltage (III/3)	250 V
Rated voltage (III/2)	320 V
Rated voltage (II/2)	630 V
Connection in acc. with standard	EN-VDE
Nominal current I_N	12 A
Nominal cross section	2.5 mm²
Maximum load current	12 A
Insulating material	PA
Inflammability class according to UL 94	V0

Printed-circuit board connector - FKC 2,5/15-ST-5,08 - 1873184

Technical data

General

Internal cylindrical gage	A2
Stripping length	10 mm
Number of positions	15

Connection data

Conductor cross section solid min.	0.2 mm²
Conductor cross section solid max.	2.5 mm²
Conductor cross section stranded min.	0.2 mm²
Conductor cross section stranded max.	2.5 mm²
Conductor cross section stranded, with ferrule without plastic sleeve min.	0.25 mm²
Conductor cross section stranded, with ferrule without plastic sleeve max.	2.5 mm²
Conductor cross section stranded, with ferrule with plastic sleeve min.	0.25 mm²
Conductor cross section stranded, with ferrule with plastic sleeve max.	2.5 mm²
Conductor cross section AWG/kcmil min.	24
Conductor cross section AWG/kcmil max	12
2 conductors with same cross section, stranded, TWIN ferrules with plastic sleeve, min.	0.5 mm²
2 conductors with same cross section, stranded, TWIN ferrules with plastic sleeve, max.	1.5 mm²
Minimum AWG according to UL/CUL	26
Maximum AWG according to UL/CUL	12

classifications

eCl@ss

eCl@ss 4.0	272607xx
eCl@ss 4.1	27260701
eCl@ss 5.0	27260701
eCl@ss 5.1	27260701
eCl@ss 6.0	27260704
eCl@ss 7.0	27440402
eCl@ss 8.0	27440402

ETIM

ETIM 3.0	EC001121
ETIM 4.0	EC002638
ETIM 5.0	EC002638

UNSPSC

UNSPSC 6.01	30211810
UNSPSC 7.0901	39121409

Printed-circuit board connector - FKC 2,5/15-ST-5,08 - 1873184

classifications

UNSPSC

UNSPSC 11	39121409
UNSPSC 12.01	39121409
UNSPSC 13.2	39121409

approvals

UL Recognized / VDE Gutachten mit Fertigungsüberwachung / cUL Recognized / GOST / IECEE CB Scheme / GOST / CCA / cULus Recognized /

Approval details

UL Recognized

Usegroups	**B**	**D**
Nominal voltage UN	300 V	300 V
Nominal current IN	10 A	10 A
mm²/AWG/kcmil	26-12	26-12

VDE Gutachten mit Fertigungsüberwachung

Nominal voltage UN	250 V
Nominal current IN	12 A
mm²/AWG/kcmil	0.2-2.5

cUL Recognized

Usegroups	**B**	**D**
Nominal voltage UN	300 V	300 V
Nominal current IN	10 A	10 A
mm²/AWG/kcmil	26-12	26-12

GOST

IECEE CB Scheme

Printed-circuit board connector - FKC 2,5/15-ST-5,08 - 1873184

approvals

Nominal voltage UN	250 V
Nominal current IN	12 A
mm²/AWG/kcmil	0.2-2.5

CCA	
Nominal voltage UN	250 V
Nominal current IN	12 A
mm²/AWG/kcmil	0.2-2.5

cULus Recognized

accessories

Coding element

CP-MSTB - 1734634



Test plug terminal block

MPS-MT - 0201744



Printed-circuit board connector - FKC 2,5/15-ST-5,08 - 1873184

accessories

RPS - 0201647



Insulating sleeve

MPS-IH WH - 0201663



MPS-IH RD - 0201676



MPS-IH BU - 0201689



MPS-IH GN - 0201702



Screwdriver tools

Printed-circuit board connector - FKC 2,5/15-ST-5,08 - 1873184

accessories

SZS 0,6X3,5 - 1205053



Labeled terminal marker

SK 5,08/3,8:FORTL.ZAHLEN - 0804293



Terminal marking

SK 5,08/3,8:UNBEDRUCKT - 0805412



Marker pen

B-STIFT - 1051993



accessories

STZ 4-FKC-5,08 - 1876877



Printed-circuit board connector - FKC 2,5/15-ST-5,08 - 1873184

accessories

STZ 8-FKC-5,08 - 1876880

SK 5,08/3,8:SO - 0805085



Drawings

Dimensioned drawing

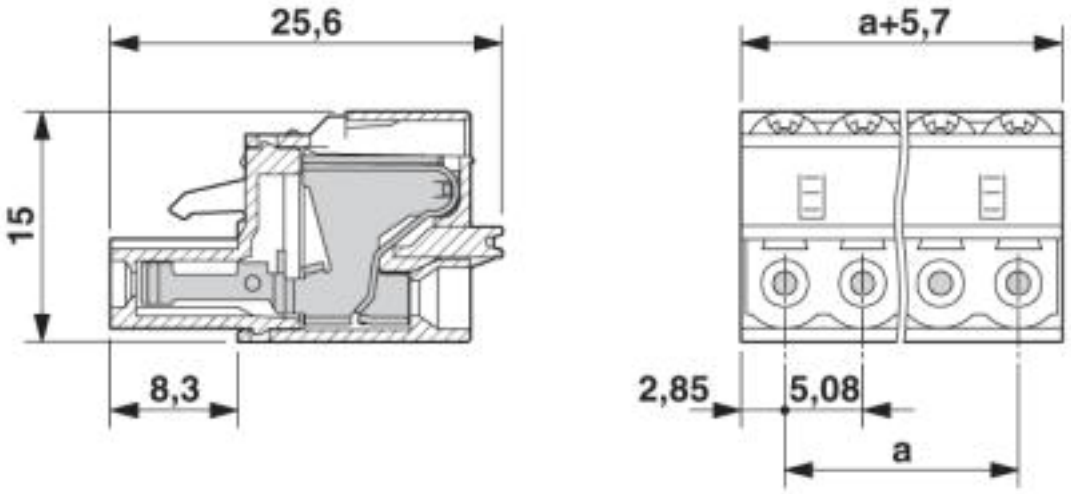

© Phoenix Contact 2013 - all rights reserved
http://www.phoenixcontact.com