PCB terminal block - PTDA 2,5/ 4-5,0 - 1725328

Please be informed that the data shown in this PDF Document is generated from our Online Catalog. Please find the complete data in the user's documentation. Our General Terms of Use for Downloads are valid (http://download.phoenixcontact.com)



The figure shows a 10-position version of the product

PCB terminal block, Nominal current: 24 A, Nom. voltage: 400 V, Pitch: 5 mm, Number of positions: 4, Connection method: Spring-cage conn., Mounting: Soldering, Conductor/PCB connection direction: 45 °, Color: green

Product Features

- Large terminal block capacity with compact dimensions
- 5.0 mm pitch
- Attractive design for connection at a glance
- Optional color coding
- Plug with optional mechanical coding
- Spring-cage double connection with direct plug-in technology with a release button

Key commercial data

package_quantity	50
GTIN	4046356129275

Technical data

Dimensions

Pitch	5 mm
Dimension a	15 mm
Pin dimensions	1,0 x 0,4
Pin spacing	5 mm
Hole diameter	1.3 mm

General

Range of articles	PTDA 2,5/
Insulating material group	I
Rated surge voltage (III/3)	4 kV
Rated surge voltage (III/2)	4 kV
Rated surge voltage (II/2)	4 kV
Rated voltage (III/3)	320 V
Rated voltage (III/2)	400 V
Rated voltage (II/2)	630 V
Connection in acc. with standard	EN-VDE
Nominal current I_N	24 A

PCB terminal block - PTDA 2,5/ 4-5,0 - 1725328

Technical data

General

Nominal cross section	2.5 mm²
Maximum load current	24 A
Insulating material	PA
Solder pin surface	Sn
Inflammability class according to UL 94	V0
Stripping length	10 mm
Number of positions	4

Connection data

Conductor cross section solid min.	0.2 mm²
Conductor cross section solid max.	2.5 mm²
Conductor cross section stranded min.	0.2 mm²
Conductor cross section stranded max.	2.5 mm²
Conductor cross section stranded, with ferrule without plastic sleeve min.	0.5 mm²
Conductor cross section stranded, with ferrule without plastic sleeve max.	2.5 mm²
Conductor cross section stranded, with ferrule with plastic sleeve min.	0.5 mm²
Conductor cross section stranded, with ferrule with plastic sleeve max.	1 mm²
Conductor cross section AWG/kcmil min.	24
Conductor cross section AWG/kcmil max	14
2 conductors with same cross section, solid min.	0.2 mm²
2 conductors with same cross section, solid max.	2.5 mm²
2 conductors with same cross section, stranded min.	0.2 mm²
2 conductors with same cross section, stranded max.	2.5 mm²
2 conductors with same cross section, stranded, ferrules without plastic sleeve, min.	0.5 mm²
2 conductors with same cross section, stranded, ferrules without plastic sleeve, max.	2.5 mm²
2 conductors with same cross section, stranded, TWIN ferrules with plastic sleeve, min.	0.5 mm²
2 conductors with same cross section, stranded, TWIN ferrules with plastic sleeve, max.	1 mm²
Minimum AWG according to UL/CUL	24
Maximum AWG according to UL/CUL	14

classifications

eCl@ss

eCl@ss 4.0	272607xx
eCl@ss 4.1	27141109
eCl@ss 5.0	27141190
eCl@ss 5.1	27141190

PCB terminal block - PTDA 2,5/ 4-5,0 - 1725328

classifications

eCl@ss

eCl@ss 6.0	27261101
eCl@ss 7.0	27440401
eCl@ss 8.0	27440401

ETIM

ETIM 3.0	EC001121
ETIM 4.0	EC002643
ETIM 5.0	EC002643

UNSPSC

UNSPSC 6.01	30211801
UNSPSC 7.0901	39121432
UNSPSC 11	34131203
UNSPSC 12.01	39121432
UNSPSC 13.2	39121432

approvals

UL Recognized / VDE Gutachten mit Fertigungsüberwachung / cUL Recognized / CCA / IECEE CB Scheme / GOST / GOST / cULus Recognized /

Approval details

UL Recognized

Usegroups	**B**	**D**
Nominal voltage UN	300 V	300 V
Nominal current IN	15 A	10 A
mm²/AWG/kcmil	24-14	24-14

VDE Gutachten mit Fertigungsüberwachung

Nominal voltage UN	250 V
Nominal current IN	24 A
mm²/AWG/kcmil	0.2-2.5

cUL Recognized

PCB terminal block - PTDA 2,5/ 4-5,0 - 1725328

approvals

Usegroups	B	D
Nominal voltage UN	300 V	300 V
Nominal current IN	15 A	10 A
mm²/AWG/kcmil	24-14	24-14

CCA	
Nominal voltage UN	250 V
Nominal current IN	24 A
mm²/AWG/kcmil	0.2-2.5

IECEE CB Scheme

Nominal voltage UN	250 V
Nominal current IN	24 A
mm²/AWG/kcmil	0.2-2.5

GOST

cULus Recognized

Drawings

PCB terminal block - PTDA 2,5/ 4-5,0 - 1725328

Drilling diagram

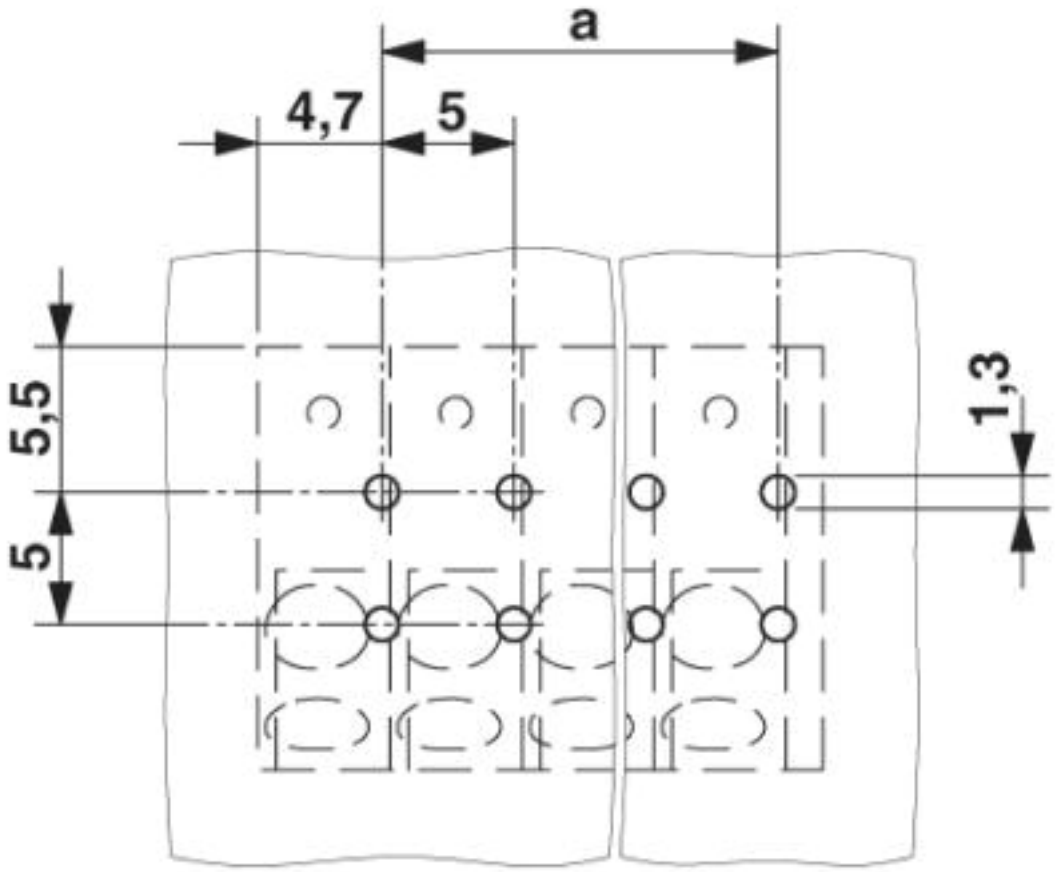

PCB terminal block - PTDA 2,5/ 4-5,0 - 1725328

Diagram

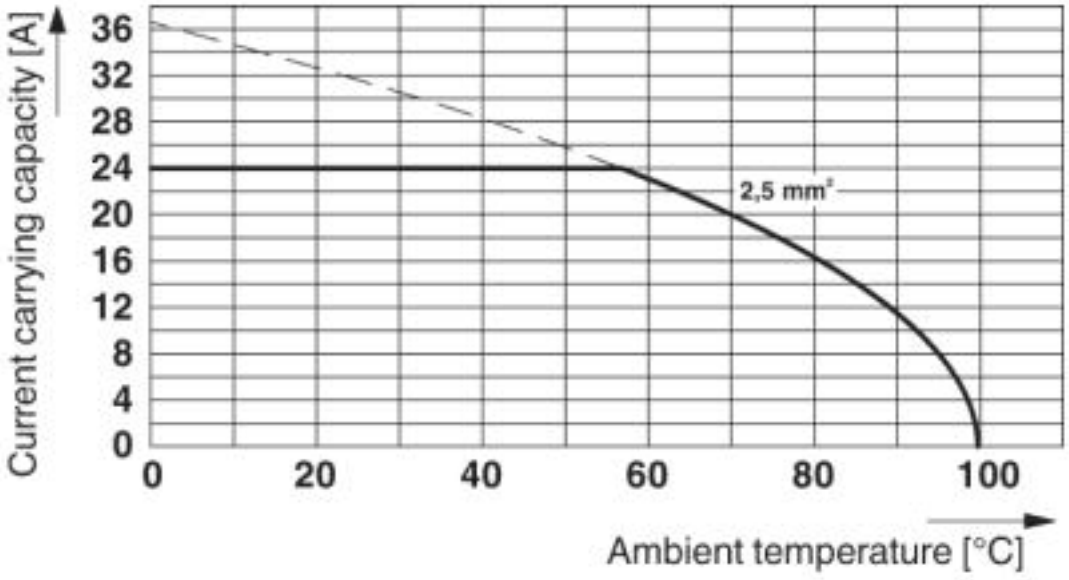

Derating diagram for 5 positions; reduction factor=0.8

Dimensioned drawing

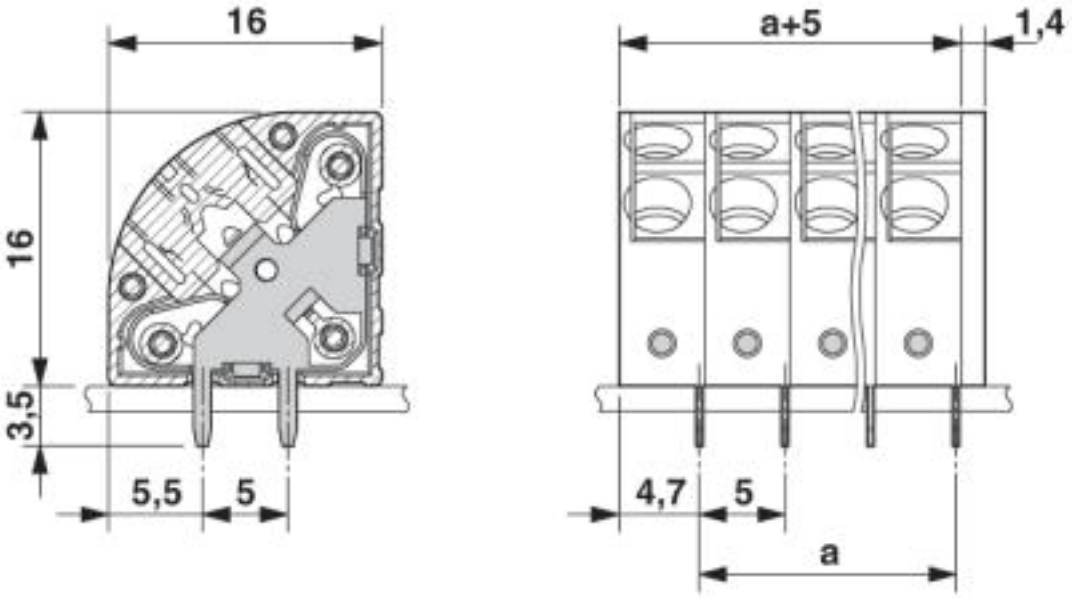

© Phoenix Contact 2013 - all rights reserved
http://www.phoenixcontact.com