PCB terminal block - PTSM 0,5/ 8-2,5-V SMD R44 - 1771156

Please be informed that the data shown in this PDF Document is generated from our Online Catalog. Please find the complete data in the user's documentation. Our General Terms of Use for Downloads are valid (http://download.phoenixcontact.com)



PCB terminal block, Nominal current: 6 A, Nom. voltage: 160 V, Pitch: 2.5 mm, Number of positions: 8, Connection method: Spring-cage conn., Mounting: SMD/THT/THR, Conductor/PCB connection direction: 90 °, Color: black

Product Features

- Compact low-profile SMD PCB terminal block with 2.5 mm pitch
- High current carrying capacity for high power transmission
- Supplied in tape-on-reel packing according to IEC 60286-3 for automated mounting
- Rugged solder anchor for secure, mechanical fixing to the surface
- Spring-cage connection with direct plug-in technology with a release mechanism
- Specifically designed for use in dedicated SMT processes

Key commercial data

package_quantity	400
GTIN	4046356460484

Technical data

Dimensions

Length	5 mm
Pitch	2.5 mm
Dimension a	17.5 mm
Pin spacing	2.5 mm

General

Range of articles	PTSM 0,5/..-V-SMD
Insulating material group	IIIa
Rated surge voltage (III/3)	2.5 kV
Rated surge voltage (III/2)	2.5 kV
Rated surge voltage (II/2)	2.5 kV
Rated voltage (III/3)	32 V
Rated voltage (III/2)	160 V
Rated voltage (II/2)	160 V
Connection in acc. with standard	EN-VDE
Nominal current I_N	6 A
Nominal cross section	0.5 mm²
Maximum load current	6 A

PCB terminal block - PTSM 0,5/ 8-2,5-V SMD R44 - 1771156

Technical data

General

Insulating material	LCP
Solder pin surface	Sn
Inflammability class according to UL 94	V0
Stripping length	6 mm
Number of positions	8

Connection data

Conductor cross section solid min.	0.14 mm²
Conductor cross section solid max.	0.5 mm²
Conductor cross section stranded min.	0.2 mm²
Conductor cross section stranded max.	0.5 mm²
Conductor cross section stranded, with ferrule without plastic sleeve min.	0.25 mm²
Conductor cross section stranded, with ferrule without plastic sleeve max.	0.5 mm²
Conductor cross section AWG/kcmil min.	24
Conductor cross section AWG/kcmil max	20
Minimum AWG according to UL/CUL	26
Maximum AWG according to UL/CUL	20

classifications

eCl@ss

eCl@ss 4.0	27141109
eCl@ss 4.1	27141109
eCl@ss 5.0	27141190
eCl@ss 5.1	27141190
eCl@ss 6.0	27261101
eCl@ss 7.0	27440401
eCl@ss 8.0	27440401

ETIM

ETIM 3.0	EC001121
ETIM 4.0	EC002643
ETIM 5.0	EC002637

UNSPSC

UNSPSC 6.01	30211801
UNSPSC 7.0901	39121432
UNSPSC 11	39121432
UNSPSC 12.01	39121432
UNSPSC 13.2	39121432

PCB terminal block - PTSM 0,5/ 8-2,5-V SMD R44 - 1771156

approvals

UL Recognized / cUL Recognized / GOST / GOST / UL Recognized / cULus Recognized /

Approval details

UL Recognized

Usegroups	B
Nominal voltage UN	150 V
Nominal current IN	5 A
mm²/AWG/kcmil	26-20

cUL Recognized

Usegroups	B
Nominal voltage UN	150 V
Nominal current IN	5 A
mm²/AWG/kcmil	26-20

GOST

Usegroups	B
Nominal voltage UN	150 V
Nominal current IN	5 A
mm²/AWG/kcmil	26-20

cULus Recognized

accessories

Screwdriver tools

PCB terminal block - PTSM 0,5/ 8-2,5-V SMD R44 - 1771156

accessories

SZS 0,4X2,0 - 1205202



Drawings

Drilling diagram

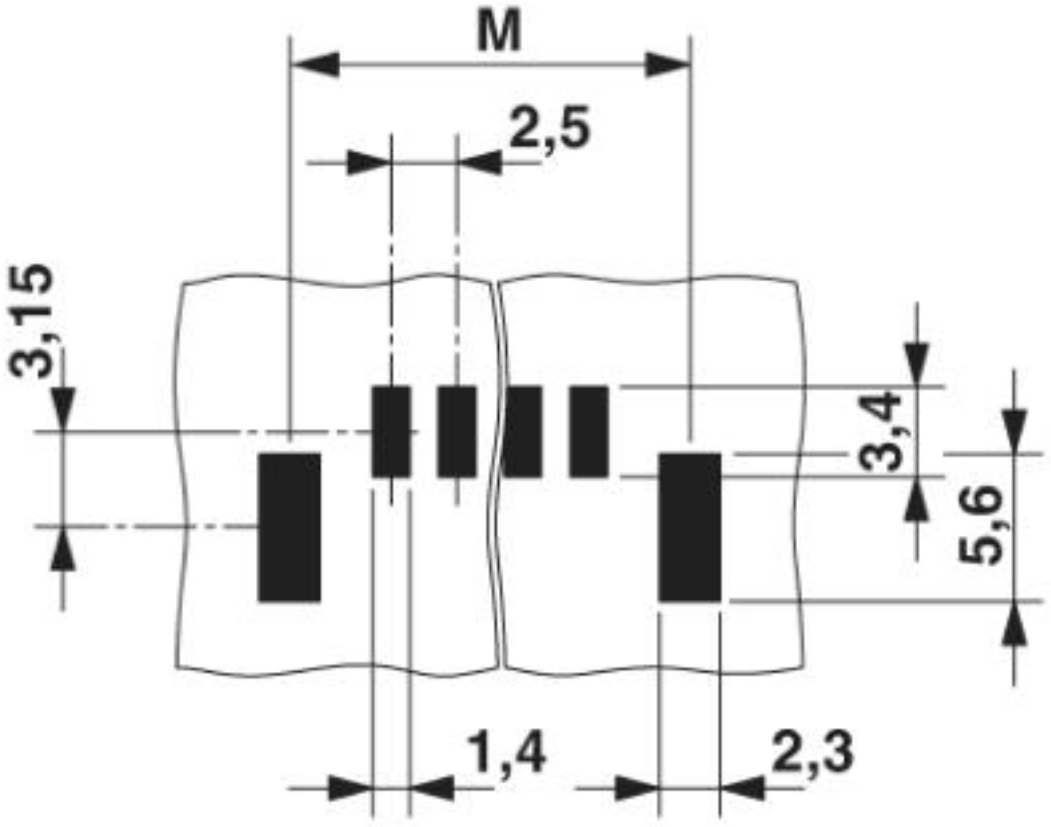

Dimension M: 23.4 mm

PCB terminal block - PTSM 0,5/ 8-2,5-V SMD R44 - 1771156

Diagram

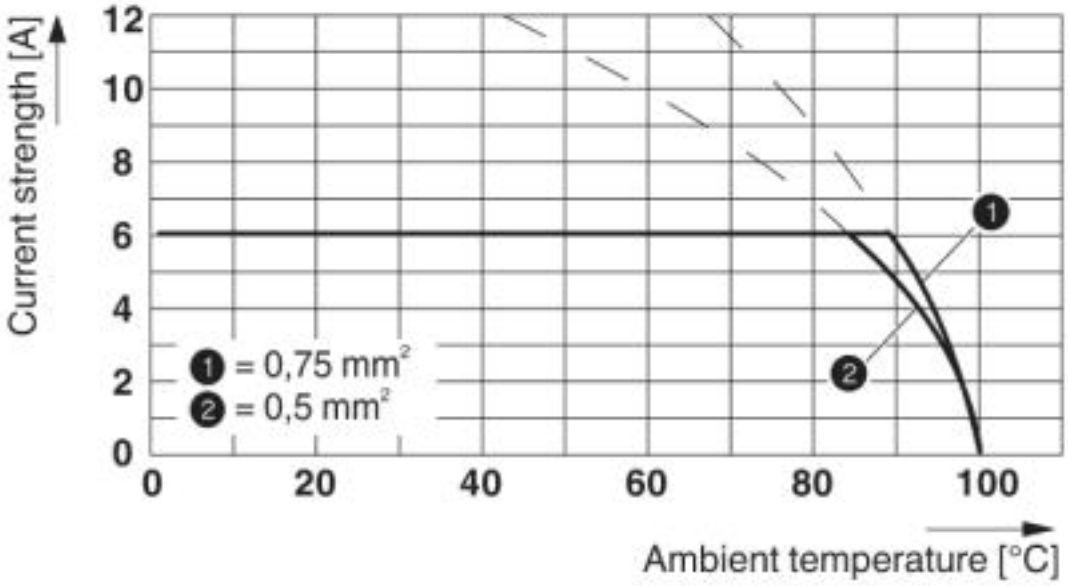

Dimensioned drawing

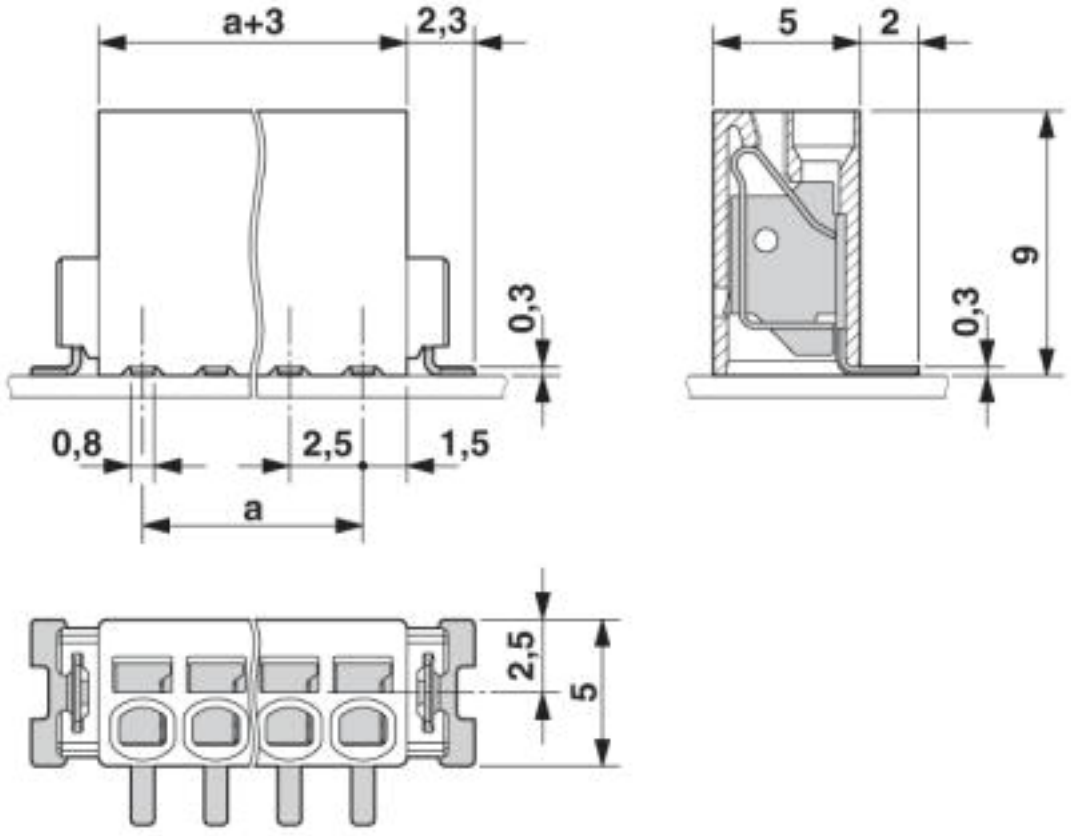

PCB terminal block - PTSM 0,5/ 8-2,5-V SMD R44 - 1771156

Dimensioned drawing

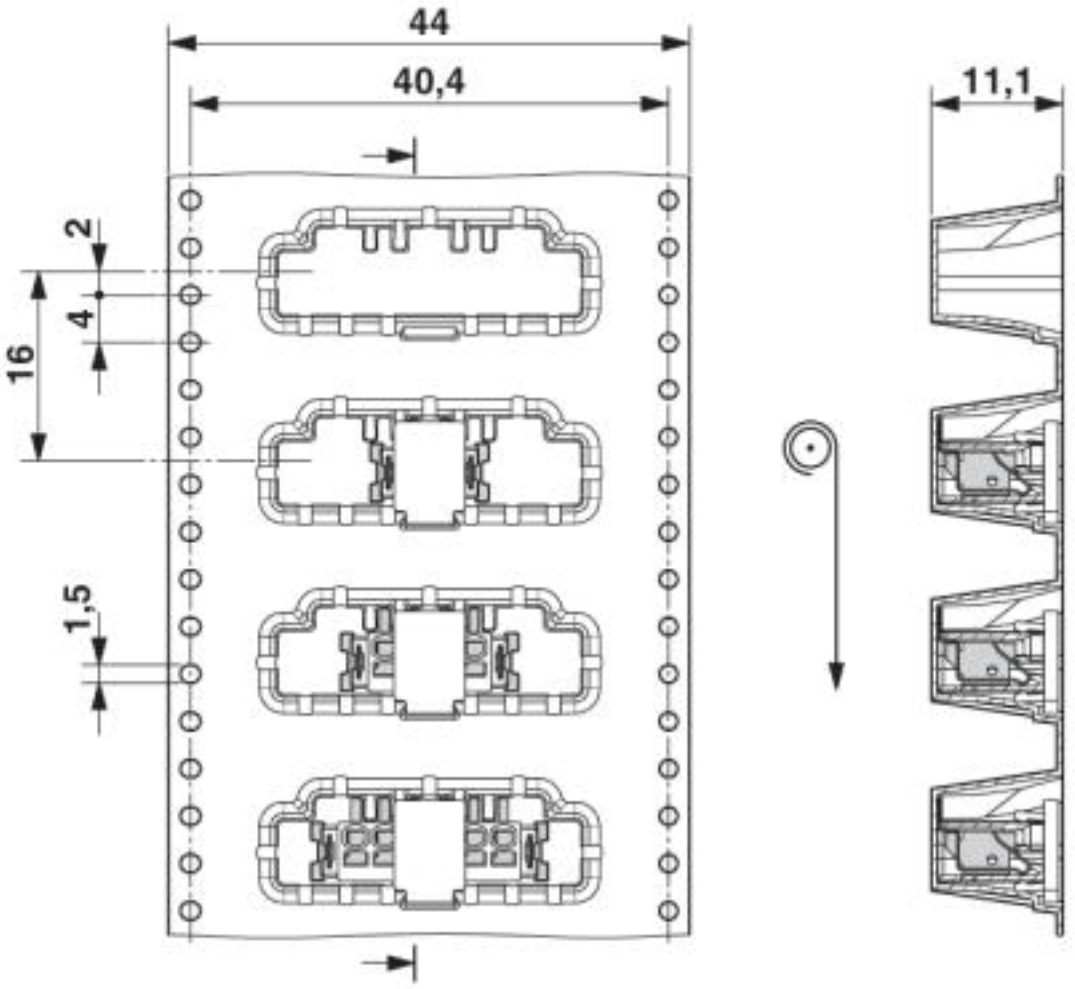

© Phoenix Contact 2013 - all rights reserved
http://www.phoenixcontact.com