Base strip - CCV 2,5/ 8-GF-5,08 P26THRR88 - 1955808

Please be informed that the data shown in this PDF Document is generated from our Online Catalog. Please find the complete data in the user's documentation. Our General Terms of Use for Downloads are valid (http://download.phoenixcontact.com)



Header, Nominal current: 12 A, Rated voltage (III/2): 320 V, Number of positions: 8, Pitch: 5.08 mm, Color: Black, Contact surface: Tin, Assembly: SMD/THT/THR, User information and design recommendations for through hole reflow technology can be found under “Downloads”

Product Features

- Standard pin length of 2.6 mm, other pin lengths available on request
- Plug-in direction vertical to the PCB
- Use in SMT reflow processes

Key commercial data

package_quantity	140
GTIN	4017918926564

Technical data

Dimensions

Length	8.6 mm
Pitch	5.08 mm
Dimension a	35.56 mm
Pin dimensions	1 x 1 mm
Pin spacing	5.08 mm
Hole diameter	1.6 mm

General

Range of articles	CCV 2,5/..-GF
Insulating material group	IIIa
Rated surge voltage (III/3)	4 kV
Rated surge voltage (III/2)	4 kV
Rated surge voltage (II/2)	4 kV
Rated voltage (III/3)	250 V
Rated voltage (III/2)	320 V
Rated voltage (II/2)	400 V
Connection in acc. with standard	EN-VDE
Nominal current I_N	12 A
Maximum load current	12 A (per position)
Insulating material	LCP
Inflammability class according to UL 94	V0

Base strip - CCV 2,5/ 8-GF-5,08 P26THRR88 - 1955808

Technical data

General

Color	Black
Number of positions	8

classifications

eCl@ss

eCl@ss 4.0	272607xx
eCl@ss 4.1	27260701
eCl@ss 5.0	27260701
eCl@ss 5.1	27260701
eCl@ss 6.0	27260704
eCl@ss 7.0	27440402
eCl@ss 8.0	27440402

ETIM

ETIM 3.0	EC001121
ETIM 4.0	EC002637
ETIM 5.0	EC002637

UNSPSC

UNSPSC 6.01	30211810
UNSPSC 7.0901	39121409
UNSPSC 11	39121409
UNSPSC 12.01	39121409
UNSPSC 13.2	39121409

approvals

UL Recognized / cUL Recognized / GOST / cULus Recognized /

Approval details

UL Recognized

Usegroups	**B**	**D**
Nominal voltage UN	250 V	300 V
Nominal current IN	10 A	10 A
mm²/AWG/kcmil		

cUL Recognized

Base strip - CCV 2,5/ 8-GF-5,08 P26THRR88 - 1955808

approvals

Usegroups	B	D
Nominal voltage UN	250 V	300 V
Nominal current IN	12 A	10 A
mm²/AWG/kcmil		

GOST

cULus Recognized

accessories

Coding element

CR-MSTB - 1734401



CR-MSTB NAT HT - 1954362



Labeled terminal marker

SK 5,08/3,8:FORTL.ZAHLEN - 0804293



Base strip - CCV 2,5/ 8-GF-5,08 P26THRR88 - 1955808

accessories

SK 5,08/3,8: 0-9 - 0804303



Terminal marking

SK 5,08/3,8:UNBEDRUCKT - 0805412



Marker pen

B-STIFT - 1051993



accessories

SK 5,08/3,8:SO - 0805085



Drawings

Application drawing

Base strip - CCV 2,5/ 8-GF-5,08 P26THRR88 - 1955808

Drilling diagram

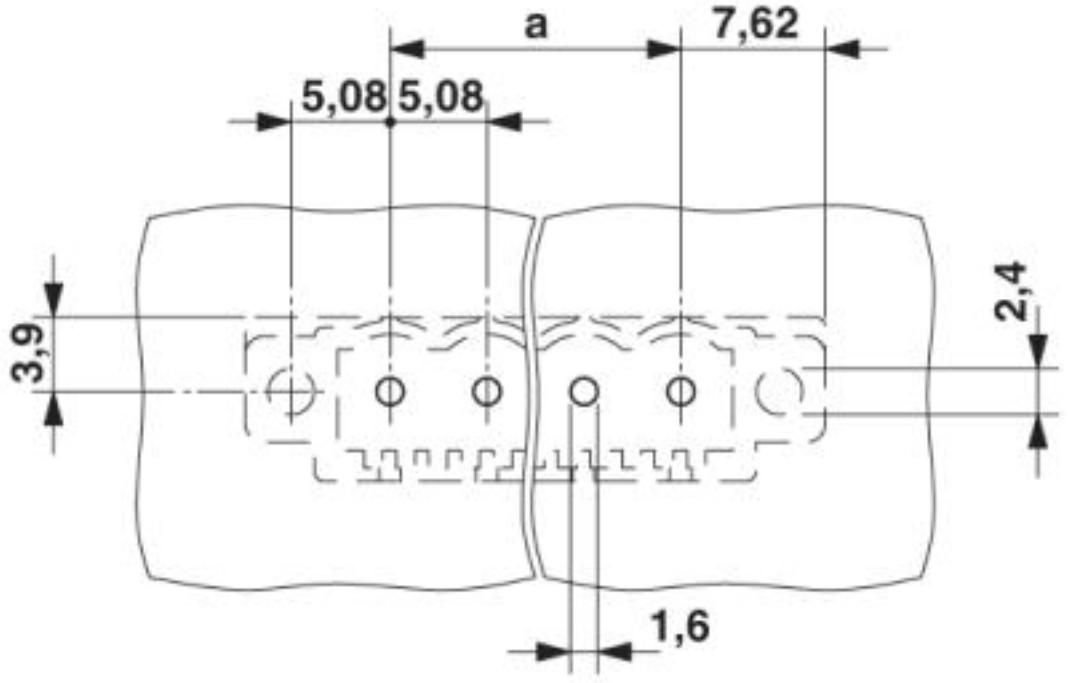

Dimensioned drawing

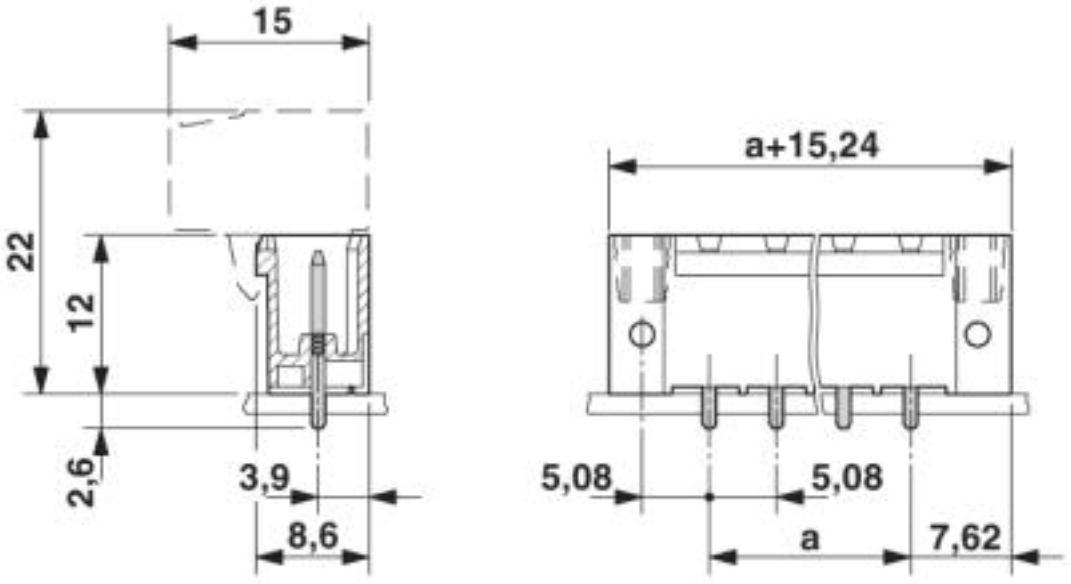

Base strip - CCV 2,5/ 8-GF-5,08 P26THRR88 - 1955808

Dimensioned drawing

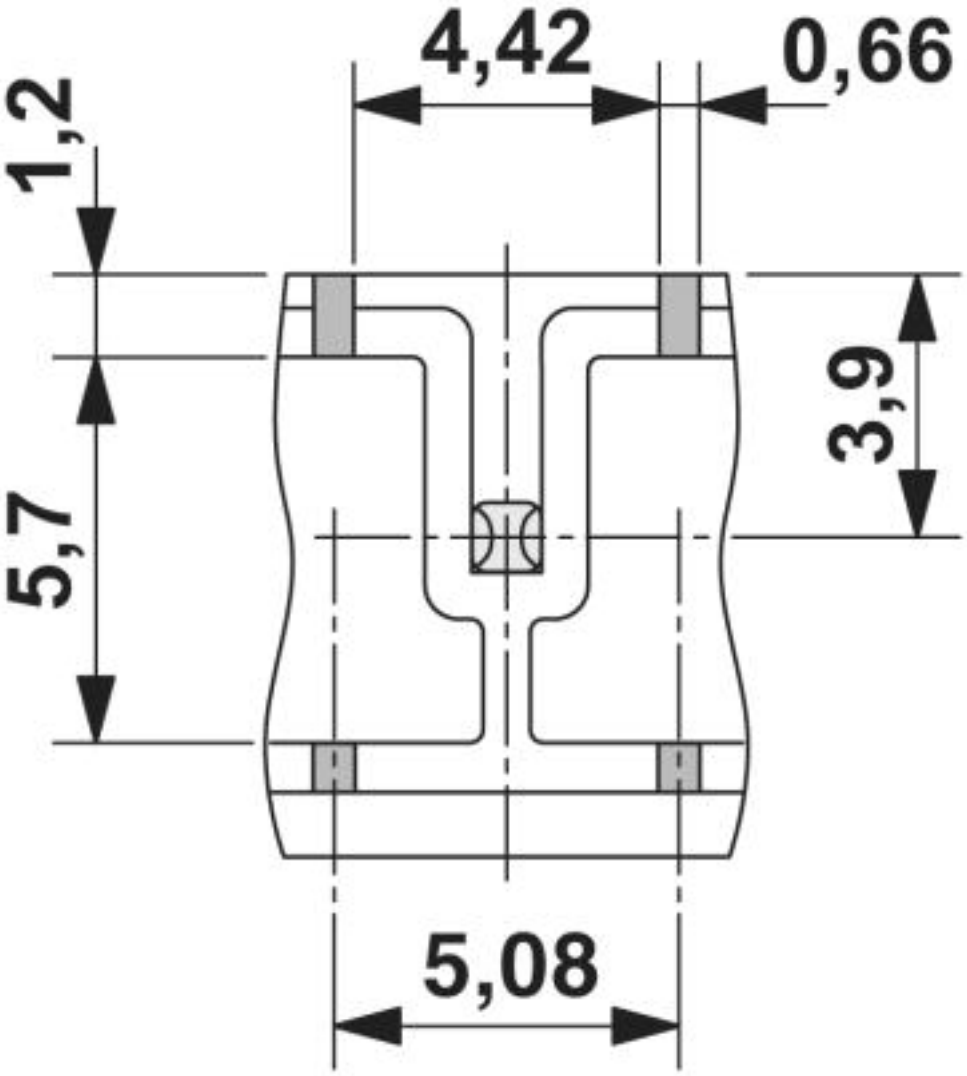

Bottom view, free space for solder paste, 0.55 mm deep

Base strip - CCV 2,5/ 8-GF-5,08 P26THRR88 - 1955808

Dimensioned drawing

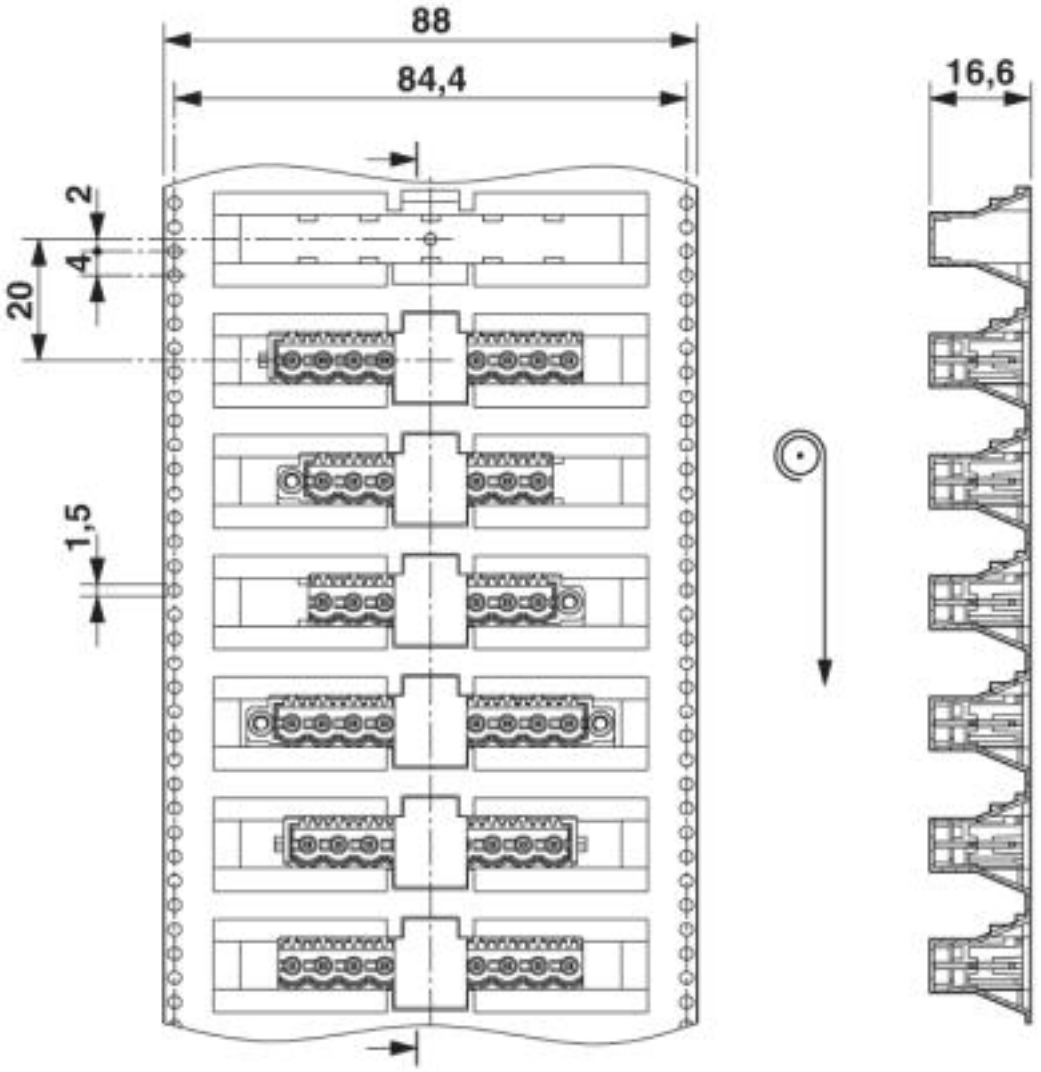

Direction of the arrow = feeding direction

Base strip - CCV 2,5/ 8-GF-5,08 P26THRR88 - 1955808

Dimensioned drawing

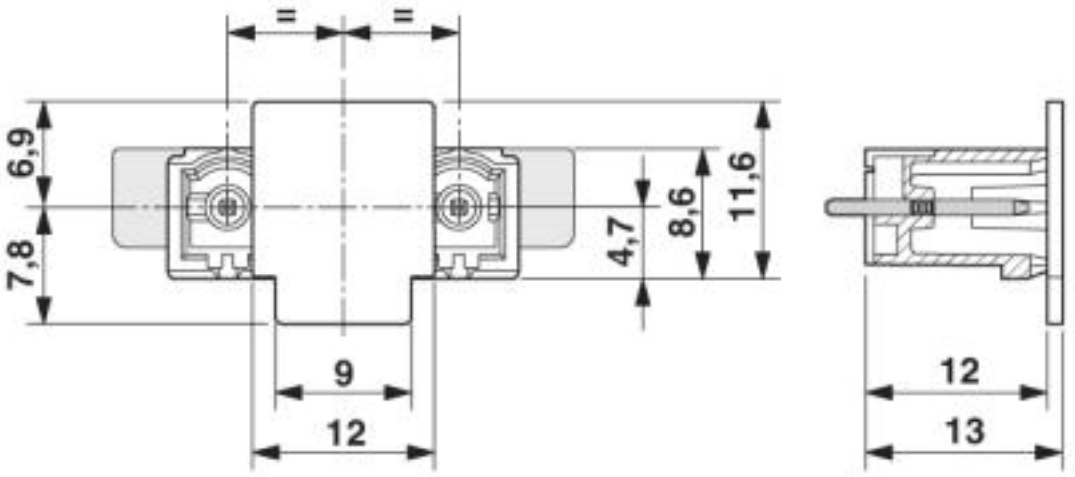

© Phoenix Contact 2013 - all rights reserved
http://www.phoenixcontact.com