PCB terminal block - PT 1,5/ 7-PH-3,5 - 1984361

Please be informed that the data shown in this PDF Document is generated from our Online Catalog. Please find the complete data in the user's documentation. Our General Terms of Use for Downloads are valid (http://download.phoenixcontact.com)



The figure shows a 10-position version of the product

Plug component, Nominal current: 8 A, Rated voltage (III/2): 200 V, Number of positions: 7, Pitch: 3.5 mm, Connection method: Screw connection, Color: green, Contact surface: Tin

Product Features

- Plugs with two integrated plug-in directions are available, can be keyed on request
- Large terminal block capacity thanks to rectangular clamping space
- 3.5 mm and 5.0 mm pitch
- Plugs with a rugged and reliable contact system
- Highly flexible conductor protection for easy, repeated connection
- Coding option
- Plus/minus screw

Key commercial data

package_quantity	100
GTIN	4017918935924

Technical data

Dimensions

Length	12.9 mm
Height	11 mm
Pitch	3.5 mm
Dimension a	21 mm

General

Range of articles	PT 1,5/..-PH
Insulating material group	I
Rated surge voltage (III/3)	2.5 kV
Rated surge voltage (III/2)	2.5 kV
Rated surge voltage (II/2)	2.5 kV
Rated voltage (III/3)	160 V
Rated voltage (III/2)	200 V
Rated voltage (II/2)	400 V
Connection in acc. with standard	EN-VDE
Nominal current I_N	8 A

PCB terminal block - PT 1,5/ 7-PH-3,5 - 1984361

Technical data

General

Nominal cross section	1.5 mm²
Maximum load current	8 A
Insulating material	PA
Inflammability class according to UL 94	V0
Stripping length	5 mm
Number of positions	7
Screw thread	M2
Tightening torque, min	0.22 Nm
Tightening torque max	0.25 Nm

Connection data

Conductor cross section solid min.	0.2 mm²
Conductor cross section solid max.	1.5 mm²
Conductor cross section stranded min.	0.2 mm²
Conductor cross section stranded max.	1.5 mm²
Conductor cross section stranded, with ferrule with plastic sleeve min.	0.25 mm²
Conductor cross section stranded, with ferrule with plastic sleeve max.	0.75 mm²
Conductor cross section AWG/kcmil min.	26
Conductor cross section AWG/kcmil max	16
2 conductors with same cross section, solid min.	0.2 mm²
2 conductors with same cross section, solid max.	0.34 mm²
2 conductors with same cross section, stranded min.	0.2 mm²
2 conductors with same cross section, stranded max.	0.5 mm²
Minimum AWG according to UL/CUL	26
Maximum AWG according to UL/CUL	16

classifications

eCl@ss

eCl@ss 4.0	272607xx
eCl@ss 4.1	27141109
eCl@ss 5.0	27141190
eCl@ss 5.1	27141190
eCl@ss 6.0	27261101
eCl@ss 7.0	27440401
eCl@ss 8.0	27440401

ETIM

ETIM 3.0	EC001121
ETIM 4.0	EC002638
ETIM 5.0	EC002638

PCB terminal block - PT 1,5/ 7-PH-3,5 - 1984361

classifications

UNSPSC

UNSPSC 6.01	30211801
UNSPSC 7.0901	39121432
UNSPSC 11	34131203
UNSPSC 12.01	39121432
UNSPSC 13.2	39121432

approvals

UL Recognized / SEV / cUL Recognized / CCA / GOST / GOST / cULus Recognized /

Approval details

UL Recognized

Usegroups	**B**	**D**
Nominal voltage UN	300 V	300 V
Nominal current IN	10 A	10 A
mm²/AWG/kcmil	26-16	26-16

SEV	
Nominal voltage UN	160 V
Nominal current IN	6 A
mm²/AWG/kcmil	1.5

cUL Recognized

Usegroups	**B**	**D**
Nominal voltage UN	300 V	300 V
Nominal current IN	10 A	10 A
mm²/AWG/kcmil	26-16	26-16

CCA	
Nominal voltage UN	160 V
Nominal current IN	6 A
mm²/AWG/kcmil	1.5

PCB terminal block - PT 1,5/ 7-PH-3,5 - 1984361

approvals

GOST

cULus Recognized

accessories

Screwdriver tools

SZS 0,4X2,5 VDE - 1205037



Drawings

Diagram

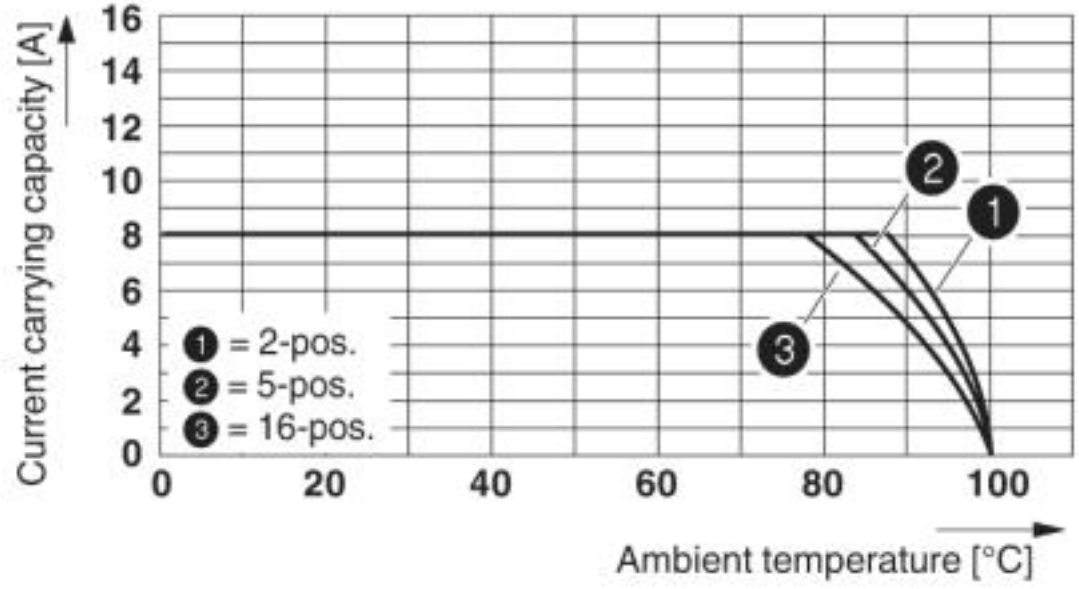

PCB terminal block - PT 1,5/ 7-PH-3,5 - 1984361

Dimensioned drawing

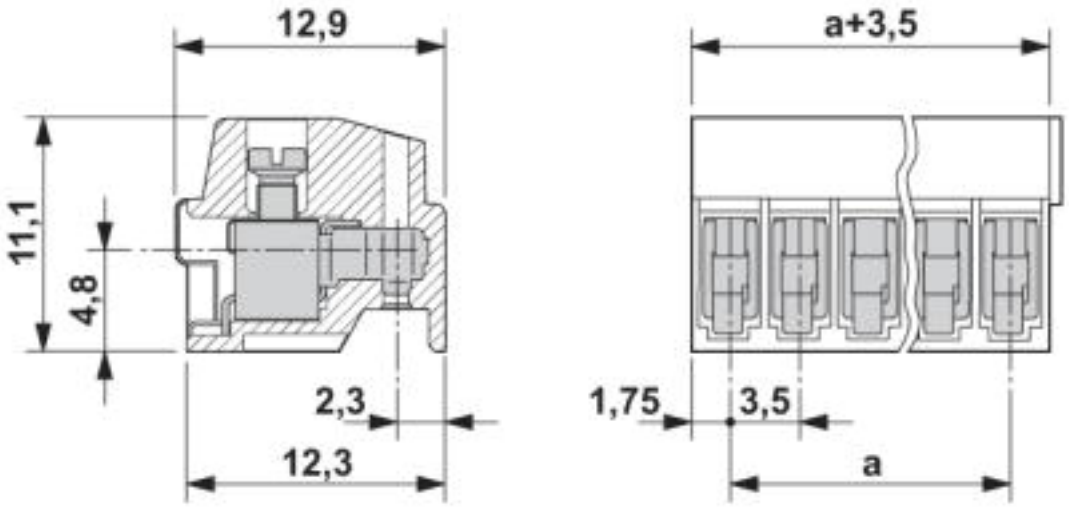

© Phoenix Contact 2013 - all rights reserved
http://www.phoenixcontact.com