Housing - MDSTBV 2,5/ 4-G-5,08 - 1845507

Please be informed that the data shown in this PDF Document is generated from our Online Catalog. Please find the complete data in the user's documentation. Our General Terms of Use for Downloads are valid (http://download.phoenixcontact.com)



The figure shows a 10-pos. version with 20 contacts

Header, Nominal current: 10 A, Rated voltage (III/2): 320 V, Number of positions: 4, Pitch: 5.08 mm, Color: green, Contact surface: Tin, Assembly: Soldering, Can be aligned! Mounting flange: Order No. 1836477, 1836480. In combination with MVSTB or FKCV plug components, both an MVSTBW (or FKCVW) and an MVSTBR plug (or FKCVR) must be used. Combination with TMSTBP plug components is not possible!

Product Features

- Double-level header with offset levels
- Plug-in direction vertical to the PCB
- Improved view and access to lower level
- High contact density

Key commercial data

package_quantity	50
GTIN	4017918184629

Technical data

Dimensions

Length	28.5 mm
Pitch	5.08 mm
Dimension a	15.24 mm
Pin dimensions	1 x 1 mm
Hole diameter	1.4 mm

General

Range of articles	MDSTBV 2,5/..-G
Insulating material group	III
Rated surge voltage (III/3)	4 kV
Rated surge voltage (III/2)	4 kV
Rated surge voltage (II/2)	4 kV
Rated voltage (III/3)	250 V
Rated voltage (III/2)	320 V
Rated voltage (II/2)	400 V
Connection in acc. with standard	EN-VDE
Nominal current I_N	10 A
Maximum load current	10 A
Insulating material	PBT

Housing - MDSTBV 2,5/ 4-G-5,08 - 1845507

Technical data

General

Color	green
Number of positions	4

classifications

eCl@ss

eCl@ss 4.0	272607xx
eCl@ss 4.1	27260701
eCl@ss 5.0	27260701
eCl@ss 5.1	27260701
eCl@ss 6.0	27260704
eCl@ss 7.0	27440402
eCl@ss 8.0	27440402

ETIM

ETIM 3.0	EC001121
ETIM 4.0	EC002637
ETIM 5.0	EC002637

UNSPSC

UNSPSC 6.01	30211810
UNSPSC 7.0901	39121409
UNSPSC 11	39121409
UNSPSC 12.01	39121409
UNSPSC 13.2	39121409

approvals

CSA / UL Recognized / VDE Gutachten mit Fertigungsüberwachung / cUL Recognized / GOST / IECEE CB Scheme / GOST / CCA / cULus Recognized /

Approval details

CSA

Usegroups	**B**	**D**
Nominal voltage UN	300 V	300 V
Nominal current IN	12 A	12 A
mm²/AWG/kcmil		

Housing - MDSTBV 2,5/ 4-G-5,08 - 1845507

approvals

UL Recognized

Usegroups	B	D
Nominal voltage UN	300 V	300 V
Nominal current IN	12 A	10 A
mm²/AWG/kcmil		

VDE Gutachten mit Fertigungsüberwachung

Nominal voltage UN	250 V
Nominal current IN	10 A
mm²/AWG/kcmil	

cUL Recognized

Usegroups	B	D
Nominal voltage UN	300 V	300 V
Nominal current IN	12 A	10 A
mm²/AWG/kcmil		

GOST

IECEE CB Scheme

Nominal voltage UN	250 V
Nominal current IN	10 A
mm²/AWG/kcmil	

CCA

Nominal voltage UN	250 V

Housing - MDSTBV 2,5/ 4-G-5,08 - 1845507

approvals

Nominal current IN	10 A
mm²/AWG/kcmil	

cULus Recognized

Drawings

Drilling diagram

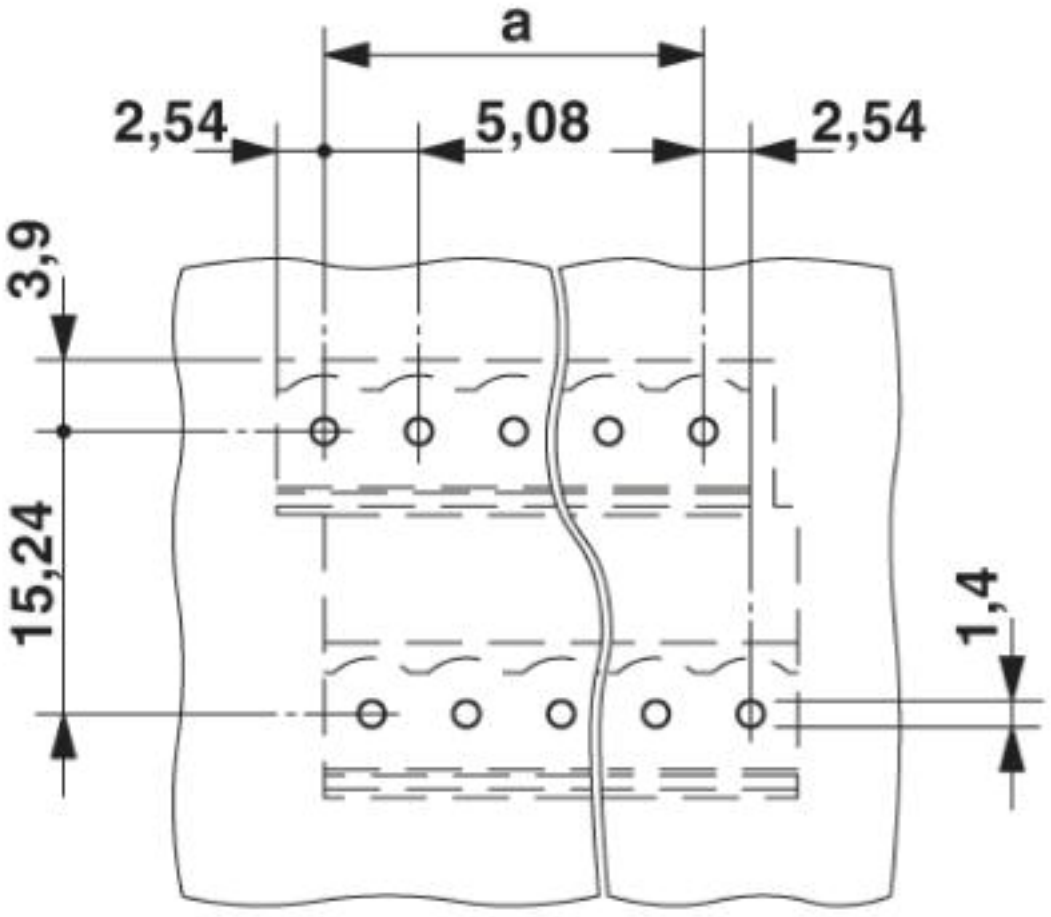

Housing - MDSTBV 2,5/ 4-G-5,08 - 1845507

Dimensioned drawing

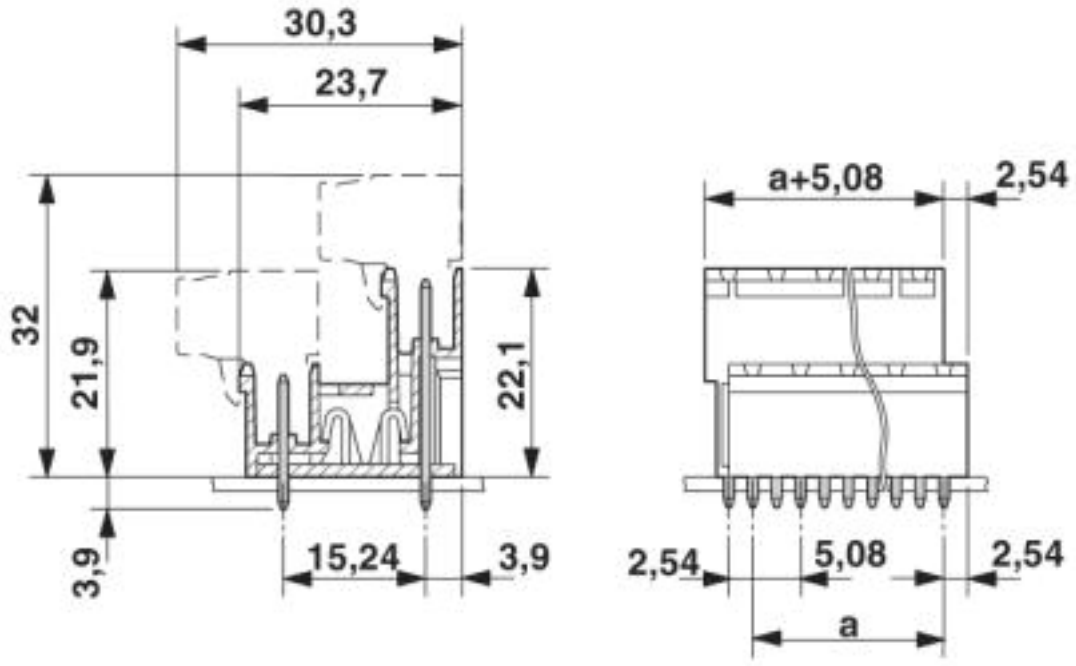

© Phoenix Contact 2013 - all rights reserved
http://www.phoenixcontact.com