# Plug - SPC 16/ 4-STF-10,16 - 1711394

Please be informed that the data shown in this PDF Document is generated from our Online Catalog. Please find the complete data in the user's documentation. Our General Terms of Use for Downloads are valid (http://download.phoenixcontact.com)



The figure shows a 5-pos. version of the product

Plug component, Nominal current: 76 A, Rated voltage (III/2): 1000 V, Number of positions: 4, Pitch: 10.16 mm, Connection method: Spring-cage conn., Color: green, Contact surface: Silver

## Product Features

- Fast connection technology thanks to tool-free direct plug-in principle
- Unlimited 600 V UL approval
- Maximum contact reliability due to integrated double steel spring
- CP-PC RD coding profile
- Push-in spring-cage plug with a current carrying capacity of 76 A

## Key commercial data

| | |
|---|---|
| **package_quantity** | 50 |
| **GTIN** | 4046356081146 |

## Technical data

### Dimensions

| | |
|---|---|
| **Pitch** | 10.16 mm |
| **Dimension a** | 30.48 mm |

### General

| | |
|---|---|
| **Range of articles** | SPC 16/..-STF |
| **Insulating material group** | I |
| **Rated surge voltage (III/3)** | 8 kV |
| **Rated surge voltage (III/2)** | 8 kV |
| **Rated surge voltage (II/2)** | 6 kV |
| **Rated voltage (III/3)** | 1000 V |
| **Rated voltage (III/2)** | 1000 V |
| **Rated voltage (II/2)** | 1000 V |
| **Connection in acc. with standard** | EN-VDE |
| **Nominal current $I_N$** | 76 A |
| **Nominal cross section** | 16 mm² |
| **Maximum load current** | 76 A |
| **Insulating material** | PA |
| **Inflammability class according to UL 94** | V0 |

# Plug - SPC 16/ 4-STF-10,16 - 1711394

## Technical data

### General

| | |
|---|---|
| **Stripping length** | 18 mm |
| **Number of positions** | 4 |

### Connection data

| | |
|---|---|
| **Conductor cross section solid min.** | 0.75 mm² |
| **Conductor cross section solid max.** | 16 mm² |
| **Conductor cross section stranded min.** | 0.75 mm² |
| **Conductor cross section stranded max.** | 16 mm² |
| **Conductor cross section stranded, with ferrule without plastic sleeve min.** | 0.75 mm² |
| **Conductor cross section stranded, with ferrule without plastic sleeve max.** | 16 mm² |
| **Conductor cross section stranded, with ferrule with plastic sleeve min.** | 0.75 mm² |
| **Conductor cross section stranded, with ferrule with plastic sleeve max.** | 10 mm² |
| **Conductor cross section AWG/kcmil min.** | 18 |
| **Conductor cross section AWG/kcmil max** | 4 |
| **2 conductors with same cross section, stranded, TWIN ferrules with plastic sleeve, min.** | 0.75 mm² |
| **2 conductors with same cross section, stranded, TWIN ferrules with plastic sleeve, max.** | 4 mm² |
| **Minimum AWG according to UL/CUL** | 20 |
| **Maximum AWG according to UL/CUL** | 4 |

## classifications

### eCl@ss

| | |
|---|---|
| **eCl@ss 4.0** | 272607xx |
| **eCl@ss 4.1** | 27260701 |
| **eCl@ss 5.0** | 27260701 |
| **eCl@ss 5.1** | 27260701 |
| **eCl@ss 6.0** | 27260704 |
| **eCl@ss 7.0** | 27440402 |
| **eCl@ss 8.0** | 27440402 |

### ETIM

| | |
|---|---|
| **ETIM 3.0** | EC001121 |
| **ETIM 4.0** | EC002638 |
| **ETIM 5.0** | EC002638 |

### UNSPSC

| | |
|---|---|
| **UNSPSC 6.01** | 30211810 |
| **UNSPSC 7.0901** | 39121409 |
| **UNSPSC 11** | 39121409 |

# Plug - SPC 16/ 4-STF-10,16 - 1711394

## classifications

### UNSPSC

| | |
|---|---|
| **UNSPSC 12.01** | 39121409 |
| **UNSPSC 13.2** | 39121409 |

## approvals

UL Recognized / SEV / cUL Recognized / CCA / IECEE CB Scheme / GOST / GOST / cULus Recognized /

### Approval details

**UL Recognized**

| **Usegroups** | **B** | **C** |
|---|---|---|
| Nominal voltage UN | 600 V | 600 V |
| Nominal current IN | 66 A | 66 A |
| mm²/AWG/kcmil | 20-4 | 20-4 |

| **SEV** | |
|---|---|
| | |
| Nominal voltage UN | 1000 V |
| Nominal current IN | 76 A |
| mm²/AWG/kcmil | 16 |

**cUL Recognized**

| **Usegroups** | **B** | **C** |
|---|---|---|
| Nominal voltage UN | 600 V | 600 V |
| Nominal current IN | 66 A | 66 A |
| mm²/AWG/kcmil | 20-4 | 20-4 |

| **CCA** | |
|---|---|
| | |
| Nominal voltage UN | 1000 V |
| Nominal current IN | 76 A |
| mm²/AWG/kcmil | |

**IECEE CB Scheme**

# Plug - SPC 16/ 4-STF-10,16 - 1711394

## approvals

| | |
|---|---|
| Nominal voltage UN | 1000 V |
| Nominal current IN | 76 A |
| mm²/AWG/kcmil | |

GOST

cULus Recognized

## accessories

**Coding element**

CP-PC RD - 1701967



## Drawings

# Plug - SPC 16/ 4-STF-10,16 - 1711394

Diagram

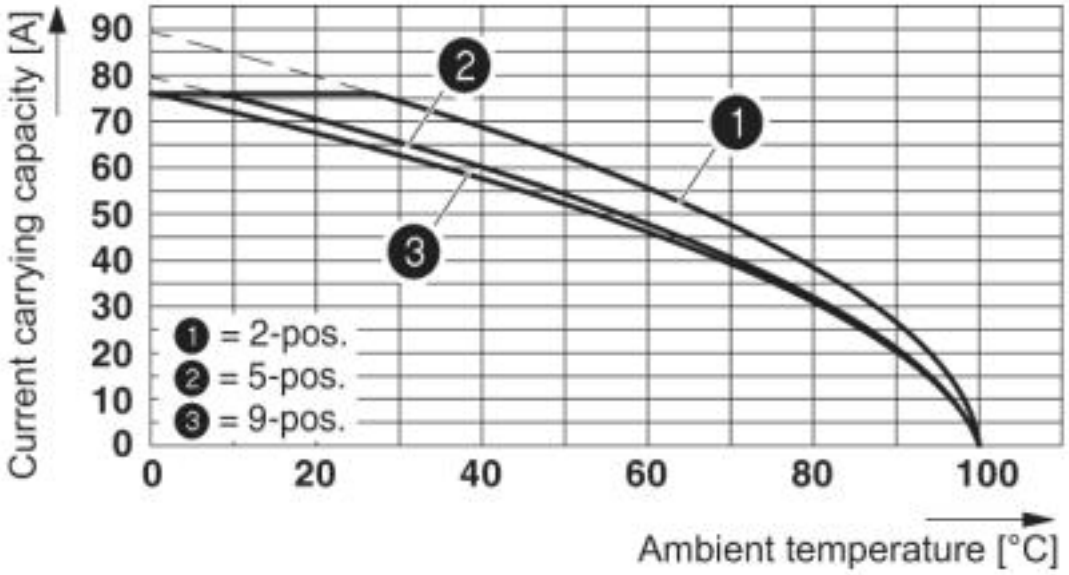


Diagram

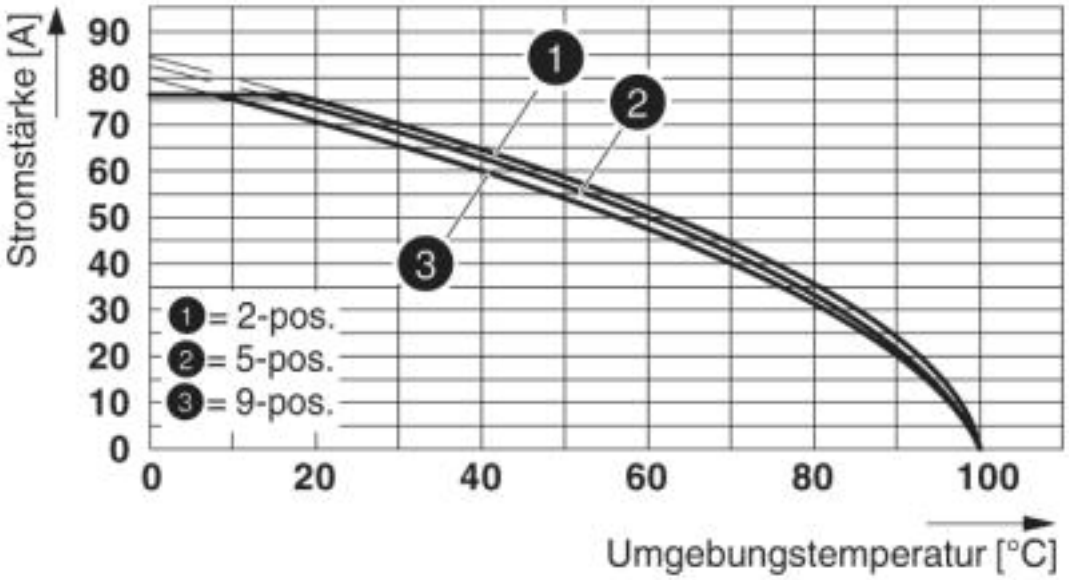


Type: SPC 16/...-ST(F)-10,16 with DFK-PC 16/...-ST(F)-10,16

# Plug - SPC 16/ 4-STF-10,16 - 1711394

Dimensioned drawing

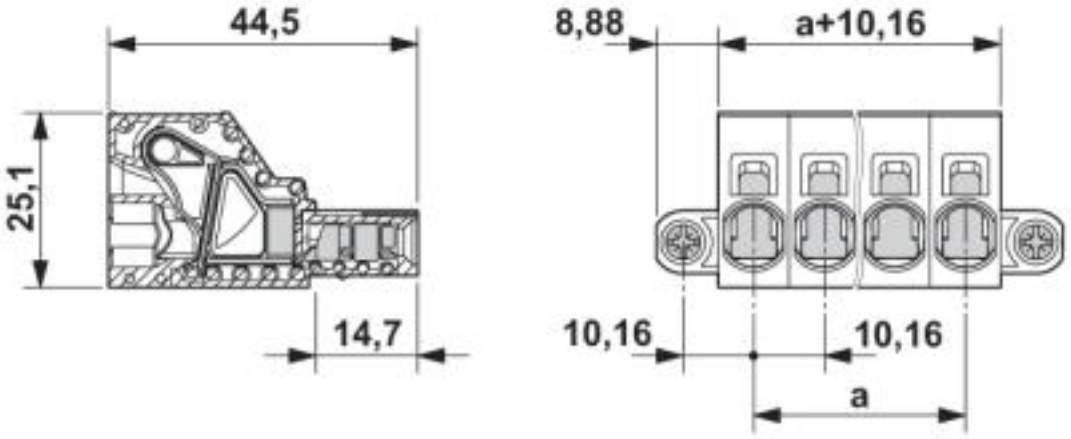


© Phoenix Contact 2013 - all rights reserved
http://www.phoenixcontact.com