Base strip - GMSTBV 2,5/10-G-7,62 - 1766644

Please be informed that the data shown in this PDF Document is generated from our Online Catalog. Please find the complete data in the user's documentation. Our General Terms of Use for Downloads are valid (http://download.phoenixcontact.com)



The figure shows a 10-position version of the product

Header, Nominal current: 12 A, Rated voltage (III/2): 630 V, Number of positions: 10, Pitch: 7.62 mm, Color: green, Contact surface: Tin, Assembly: Soldering

Product Features

- Plug-in direction vertical to the PCB
- Headers with straight solder pins for 630 V applications (III/2)

Key commercial data

package_quantity	50
GTIN	4017918032661

Technical data

Dimensions

Length	8.6 mm
Pitch	7.62 mm
Dimension a	68.58 mm
Pin dimensions	1 x 1 mm
Hole diameter	1.4 mm

General

Range of articles	GMSTBV 2,5/..-G
Insulating material group	I
Rated surge voltage (III/3)	6 kV
Rated surge voltage (III/2)	6 kV
Rated surge voltage (II/2)	6 kV
Rated voltage (III/3)	400 V
Rated voltage (III/2)	630 V
Rated voltage (II/2)	630 V
Connection in acc. with standard	EN-VDE
Nominal current I_N	12 A
Maximum load current	12 A
Insulating material	PA
Inflammability class according to UL 94	V0
Color	green

Base strip - GMSTBV 2,5/10-G-7,62 - 1766644

Technical data

General

Number of positions	10

classifications

eCl@ss

eCl@ss 4.0	272607xx
eCl@ss 4.1	27260701
eCl@ss 5.0	27260701
eCl@ss 5.1	27260701
eCl@ss 6.0	27260704
eCl@ss 7.0	27440402
eCl@ss 8.0	27440402

ETIM

ETIM 3.0	EC001121
ETIM 4.0	EC002637
ETIM 5.0	EC002637

UNSPSC

UNSPSC 6.01	30211810
UNSPSC 7.0901	39121409
UNSPSC 11	39121409
UNSPSC 12.01	39121409
UNSPSC 13.2	39121409

approvals

CSA / UL Recognized / VDE Gutachten mit Fertigungsüberwachung / cUL Recognized / GOST / IECEE CB Scheme / GOST / CCA / cULus Recognized /

Approval details

CSA

Usegroups	B	D
Nominal voltage UN	300 V	300 V
Nominal current IN	10 A	10 A
mm²/AWG/kcmil		

UL Recognized

Base strip - GMSTBV 2,5/10-G-7,62 - 1766644

approvals

Usegroups	B	D
Nominal voltage UN	300 V	300 V
Nominal current IN	15 A	10 A
mm²/AWG/kcmil		

VDE Gutachten mit Fertigungsüberwachung

Nominal voltage UN	400 V
Nominal current IN	12 A
mm²/AWG/kcmil	

cUL Recognized

Usegroups	B	D
Nominal voltage UN	300 V	300 V
Nominal current IN	15 A	10 A
mm²/AWG/kcmil		

GOST

IECEE CB Scheme

Nominal voltage UN	400 V
Nominal current IN	12 A
mm²/AWG/kcmil	

CCA

Nominal voltage UN	400 V
Nominal current IN	12 A
mm²/AWG/kcmil	

Base strip - GMSTBV 2,5/10-G-7,62 - 1766644

approvals

cULus Recognized

accessories

Coding element

CR-MSTB - 1734401



Filler plug

MSTB-BL - 1755477



Flange

MSTB-BF - 1759981



Labeled terminal marker

SK 7,62/3,8:FORTL.ZAHLEN - 0804549



Base strip - GMSTBV 2,5/10-G-7,62 - 1766644

Drawings

Drilling diagram

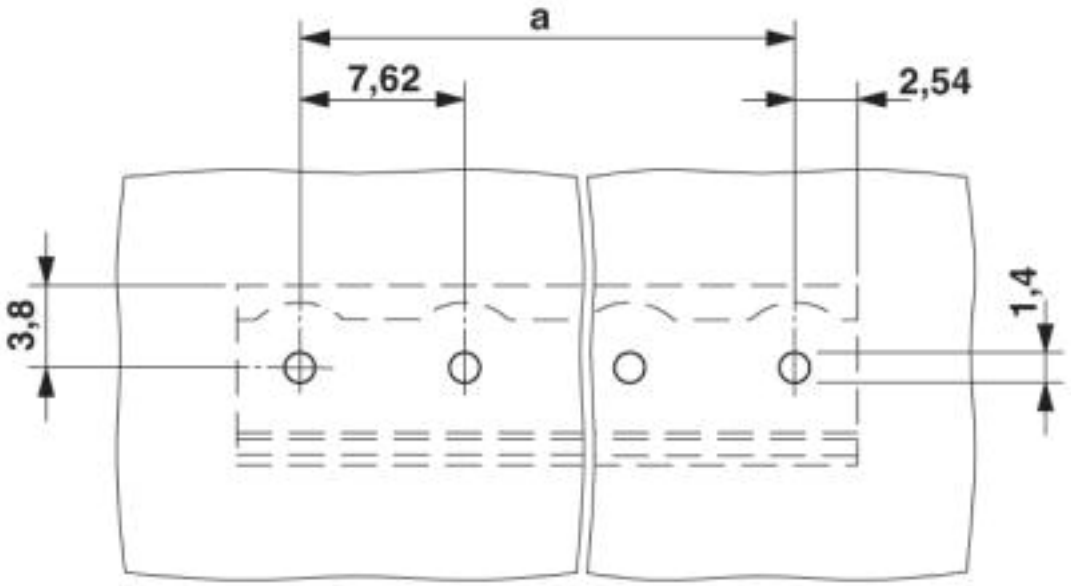

Dimensioned drawing

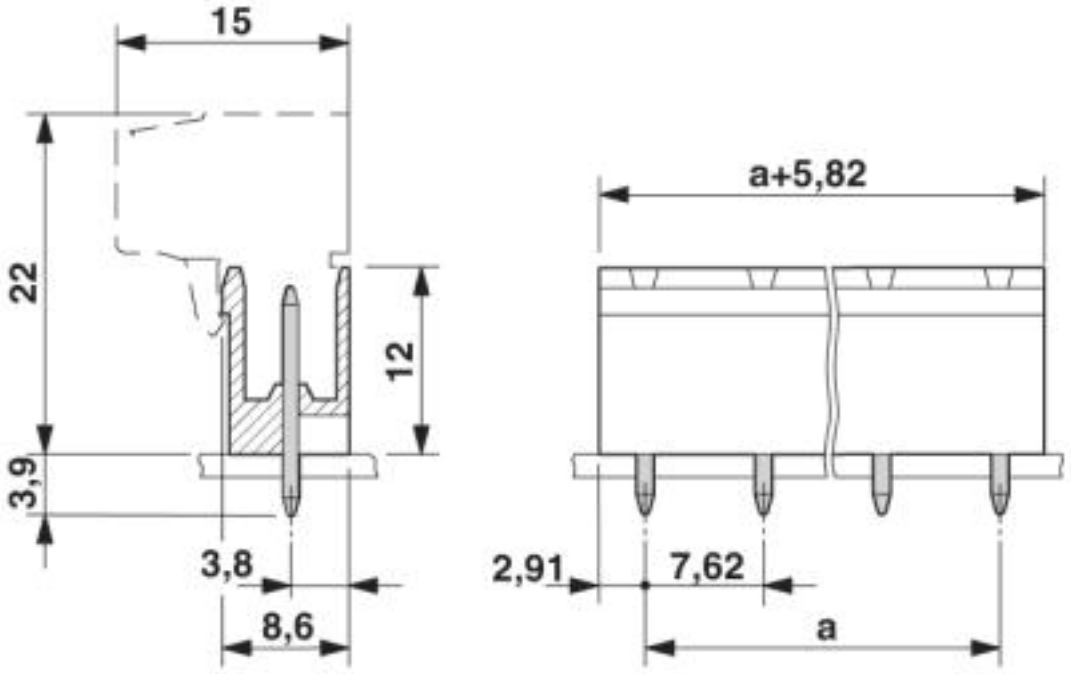

© Phoenix Contact 2013 - all rights reserved
http://www.phoenixcontact.com