Base strip - MDSTB 2,5/16-G1-5,08 - 1762509

Please be informed that the data shown in this PDF Document is generated from our Online Catalog. Please find the complete data in the user's documentation. Our General Terms of Use for Downloads are valid (http://download.phoenixcontact.com)

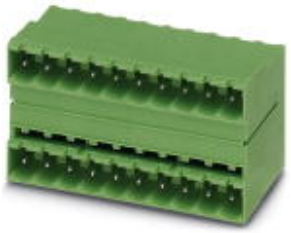

The figure shows a 10-pos. version with 20 contacts

Header, Nominal current: 10 A, Rated voltage (III/2): 320 V, Number of positions: 16, Pitch: 5.08 mm, Color: green, Contact surface: Tin, Assembly: Soldering, In combination with MVSTB or FKCV plug components, both an MVSTBW (or FKCVW) and an MVSTBR plug (or FKCVR) must be used. Combination with TMSTBP plug components is not possible!

Product Features

- MDSTBW 2,5/...-G with stand-off
- G1 types without offset levels, for flush installation on the front of devices
- Add-on ejectors for high-pos. connectors should be mounted to the left and right

Key commercial data

package_quantity	50
GTIN	4017918031107

Technical data

Dimensions

Length	22 mm
Pitch	5.08 mm
Dimension a	76.2 mm
Pin dimensions	1 x 1 mm
Hole diameter	1.4 mm

General

Range of articles	MDSTB 2,5/..-G1
Insulating material group	I
Rated surge voltage (III/3)	4 kV
Rated surge voltage (III/2)	4 kV
Rated surge voltage (II/2)	4 kV
Rated voltage (III/3)	250 V
Rated voltage (III/2)	320 V
Rated voltage (II/2)	630 V
Connection in acc. with standard	EN-VDE
Nominal current I_N	10 A
Maximum load current	10 A
Insulating material	PA
Inflammability class according to UL 94	V0

Base strip - MDSTB 2,5/16-G1-5,08 - 1762509

Technical data

General

Color	green
Number of positions	16

classifications

eCl@ss

eCl@ss 4.0	272607xx
eCl@ss 4.1	27260701
eCl@ss 5.0	27260701
eCl@ss 5.1	27260701
eCl@ss 6.0	27260704
eCl@ss 7.0	27440402
eCl@ss 8.0	27440402

ETIM

ETIM 3.0	EC001121
ETIM 4.0	EC002637
ETIM 5.0	EC002637

UNSPSC

UNSPSC 6.01	30211810
UNSPSC 7.0901	39121409
UNSPSC 11	39121409
UNSPSC 12.01	39121409
UNSPSC 13.2	39121409

approvals

CSA / UL Recognized / VDE Gutachten mit Fertigungsüberwachung / cUL Recognized / GOST / IECEE CB Scheme / GOST / CCA / cULus Recognized /

Approval details

CSA

Usegroups	**B**	**D**
Nominal voltage UN	300 V	300 V
Nominal current IN	10 A	10 A
mm²/AWG/kcmil		

Base strip - MDSTB 2,5/16-G1-5,08 - 1762509

approvals

UL Recognized

Usegroups	B	D
Nominal voltage UN	300 V	300 V
Nominal current IN	15 A	10 A
mm²/AWG/kcmil		

VDE Gutachten mit Fertigungsüberwachung

Nominal voltage UN	250 V
Nominal current IN	10 A
mm²/AWG/kcmil	

cUL Recognized

Usegroups	B	D
Nominal voltage UN	300 V	300 V
Nominal current IN	15 A	10 A
mm²/AWG/kcmil		

GOST

IECEE CB Scheme

Nominal voltage UN	250 V
Nominal current IN	10 A
mm²/AWG/kcmil	

CCA

Nominal voltage UN	250 V

Base strip - MDSTB 2,5/16-G1-5,08 - 1762509

approvals

Nominal current IN	10 A
mm²/AWG/kcmil	

cULus Recognized

accessories

Filler plug

MSTB-BL - 1755477



Coding element

CR-MSTB - 1734401



Labeled terminal marker

SK 5,08/3,8:FORTL.ZAHLEN - 0804293



Drawings

Base strip - MDSTB 2,5/16-G1-5,08 - 1762509

Drilling diagram

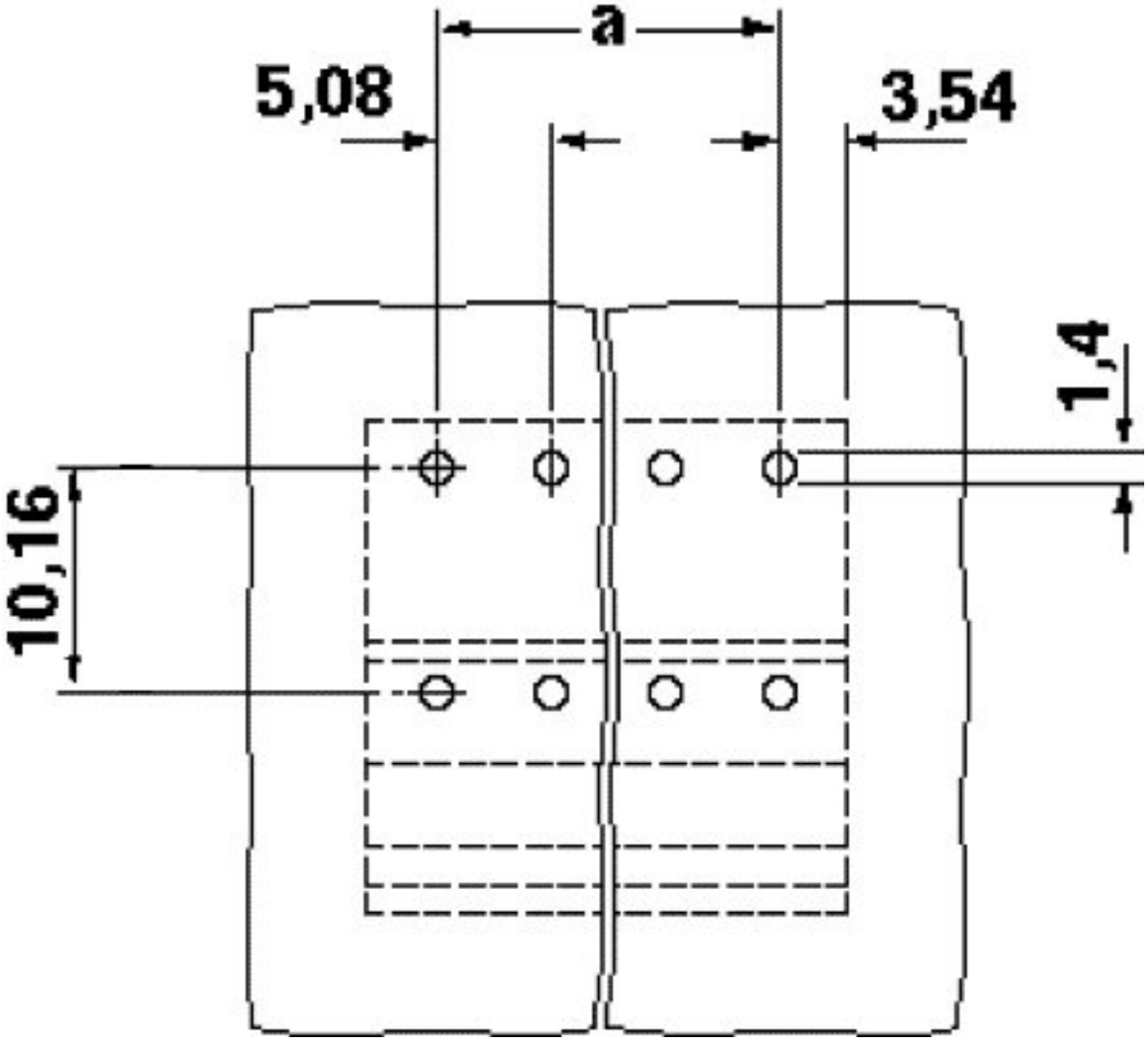

Base strip - MDSTB 2,5/16-G1-5,08 - 1762509

Dimensioned drawing

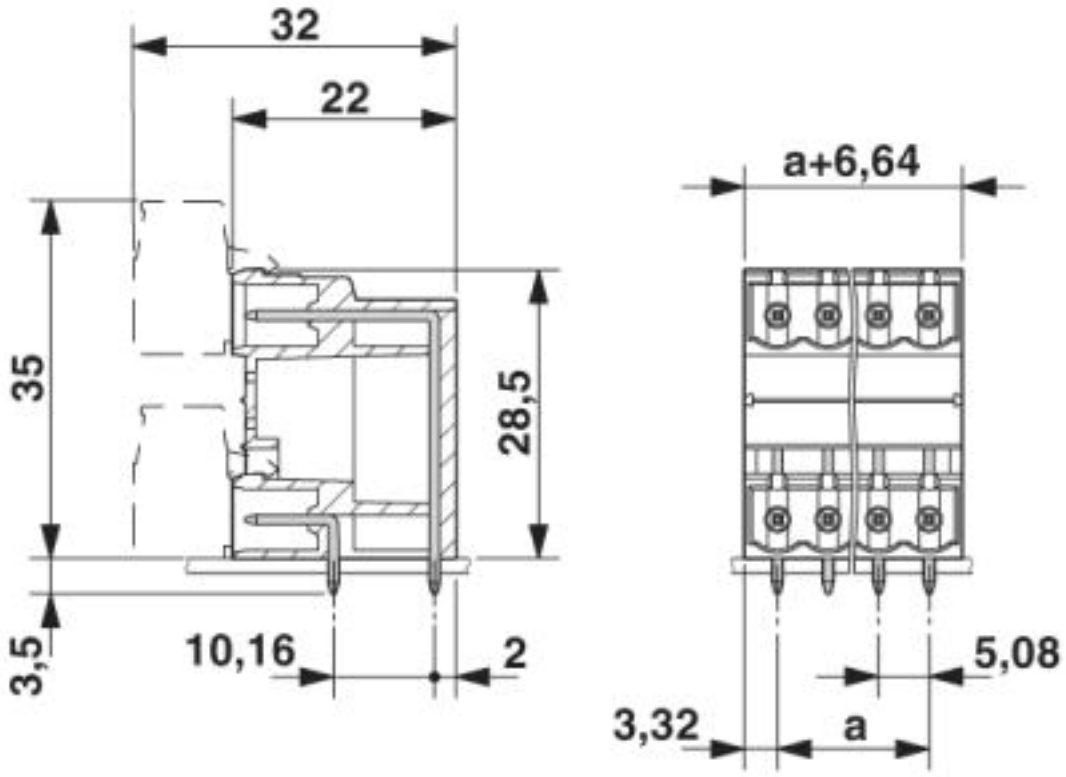

© Phoenix Contact 2013 - all rights reserved
http://www.phoenixcontact.com