Base strip - MCV 1,5/ 6-G-3,81 P26 THR - 1707463

Please be informed that the data shown in this PDF Document is generated from our Online Catalog. Please find the complete data in the user's documentation. Our General Terms of Use for Downloads are valid (http://download.phoenixcontact.com)



The figure shows a 10-position version of the product

Header, Nominal current: 8 A, Rated voltage (III/2): 160 V, Number of positions: 6, Pitch: 3.81 mm, Color: Black, Contact surface: Tin, Assembly: SMD/THT/THR, User information and design recommendations for through hole reflow technology can be found under “Downloads”

Product Features

- Plug-in direction vertical to the PCB
- Pitch: 3.5 and 3.81 mm
- Low-profile THR headers with compact pitches
- Delivery form: box packaging, in bulk for small series
- Use in SMT reflow processes

Key commercial data

package_quantity	50
GTIN	4046356034166

Technical data

Dimensions

Length	7.25 mm
Pitch	3.81 mm
Dimension a	19.05 mm
Pin dimensions	0,8 x 0,8 mm
Hole diameter	1.4 mm

General

Range of articles	MCV 1,5/..-G-THR
Insulating material group	IIIa
Rated surge voltage (III/3)	2.5 kV
Rated surge voltage (III/2)	2.5 kV
Rated surge voltage (II/2)	2.5 kV
Rated voltage (III/3)	160 V
Rated voltage (III/2)	160 V
Rated voltage (II/2)	250 V
Connection in acc. with standard	EN-VDE
Nominal current I_N	8 A
Maximum load current	8 A

Base strip - MCV 1,5/ 6-G-3,81 P26 THR - 1707463

Technical data

General

Insulating material	LCP
Inflammability class according to UL 94	V0
Color	Black
Number of positions	6

classifications

eCl@ss

eCl@ss 4.0	272607xx
eCl@ss 4.1	27260701
eCl@ss 5.0	27260701
eCl@ss 5.1	27260701
eCl@ss 6.0	27260704
eCl@ss 7.0	27440402
eCl@ss 8.0	27440402

ETIM

ETIM 3.0	EC001121
ETIM 4.0	EC002637
ETIM 5.0	EC002637

UNSPSC

UNSPSC 6.01	30211810
UNSPSC 7.0901	39121409
UNSPSC 11	39121409
UNSPSC 12.01	39121409
UNSPSC 13.2	39121409

approvals

UL Recognized / cUL Recognized / GOST / GOST / cULus Recognized /

Approval details

UL Recognized

Usegroups	**B**	**D**
Nominal voltage UN	300 V	300 V
Nominal current IN	8 A	8 A
mm²/AWG/kcmil		

Base strip - MCV 1,5/ 6-G-3,81 P26 THR - 1707463

approvals

cUL Recognized

Usegroups	B	D
Nominal voltage UN	300 V	300 V
Nominal current IN	8 A	8 A
mm²/AWG/kcmil		

GOST

cULus Recognized

accessories

Labeled terminal marker

SK 3,81/2,8:FORTL.ZAHLEN - 0804109



Terminal marking

SK U/2,8 WH:UNBEDRUCKT - 0803883



Coding element

Base strip - MCV 1,5/ 6-G-3,81 P26 THR - 1707463

accessories

CP-MSTB - 1734634



Marker pen

B-STIFT - 1051993



accessories

MC 1,5/10-LWL 1,5-3,81 - 1841174



SK 3,81/2,8:SO - 0805056



MC 1,5/10-LWL 2,3-3,81 - 1841190



Base strip - MCV 1,5/ 6-G-3,81 P26 THR - 1707463

accessories

MC 1,5/10-LWL 4-3,81 - 1841213



Drawings

Drilling diagram

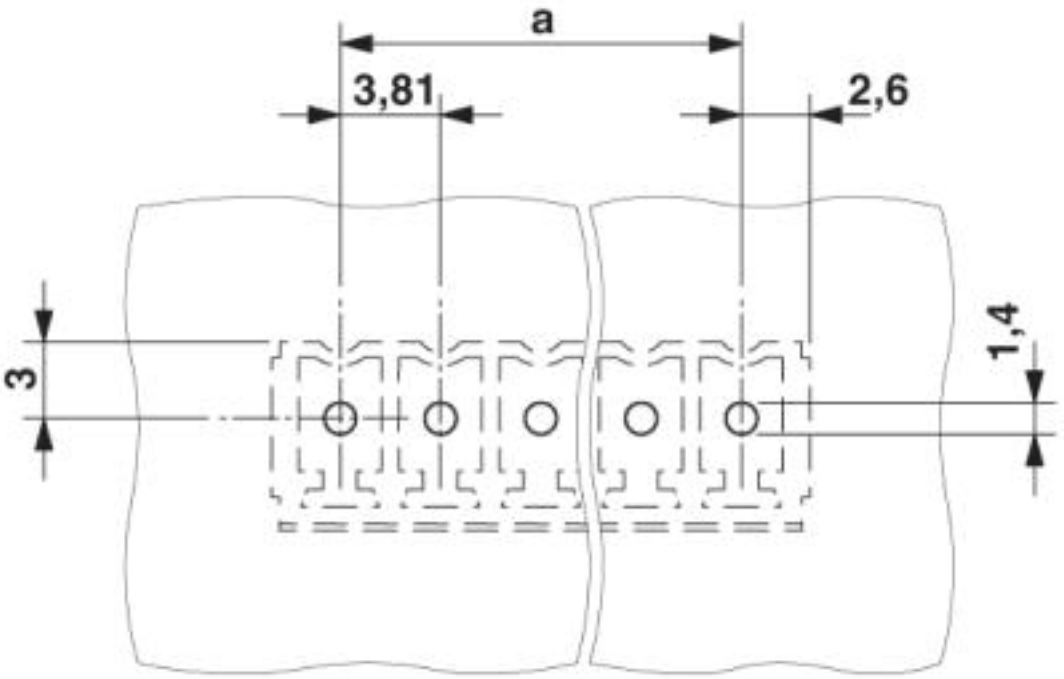

Base strip - MCV 1,5/ 6-G-3,81 P26 THR - 1707463

Diagram

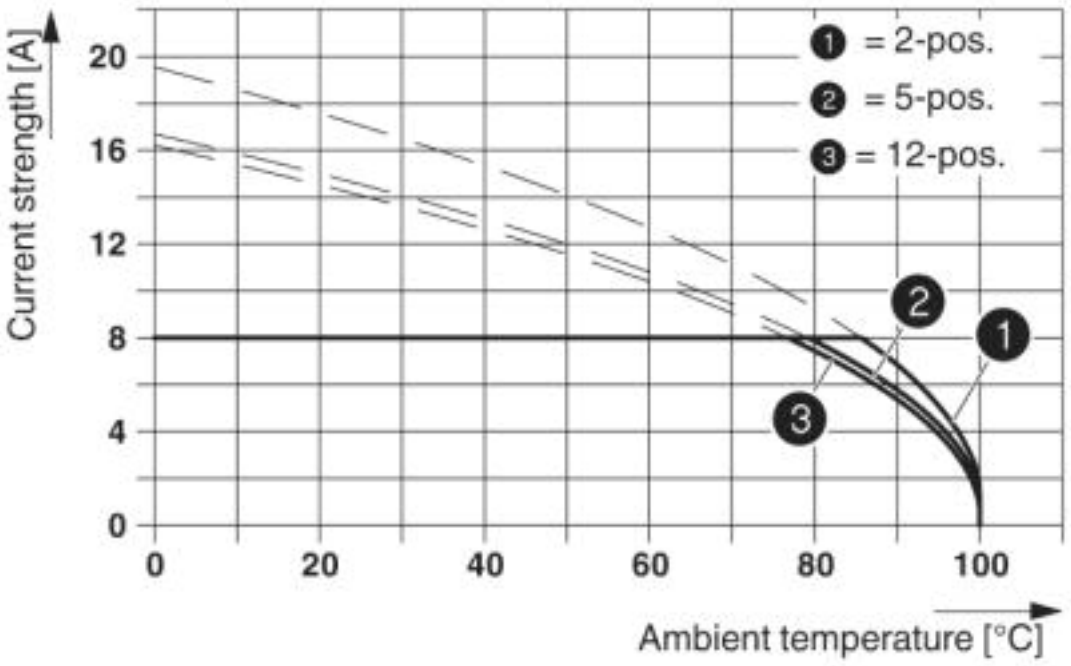

Dimensioned drawing

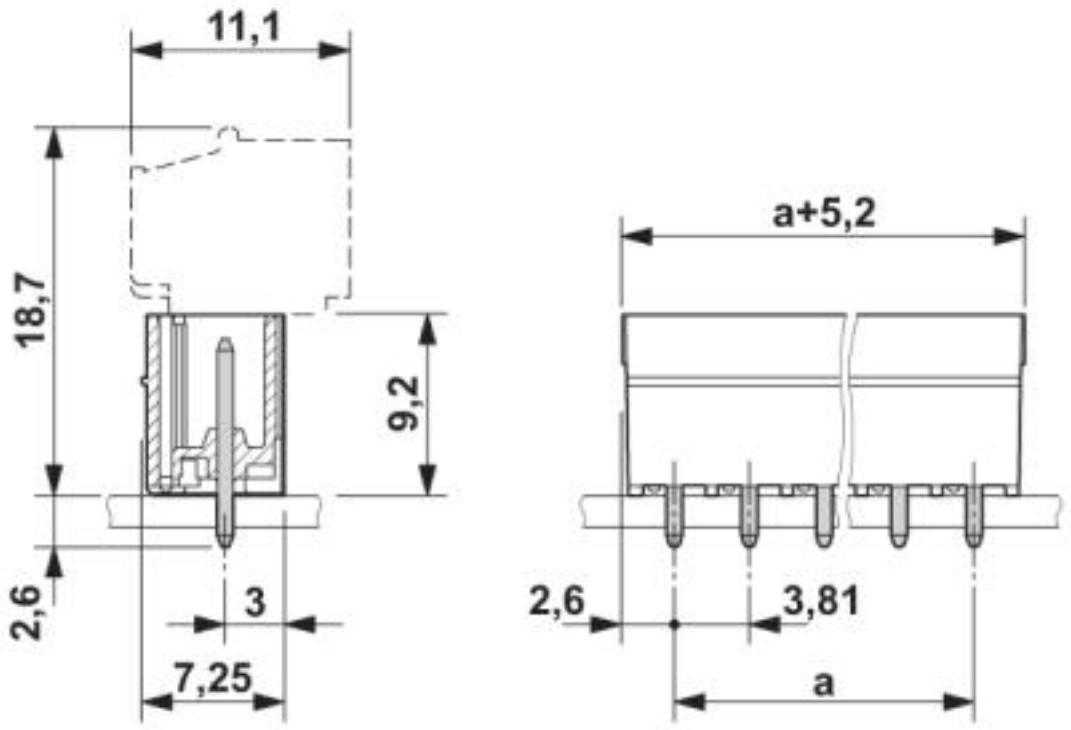

© Phoenix Contact 2013 - all rights reserved
http://www.phoenixcontact.com