# Screw compact terminal block - PTA 1,5/ 2-5,0 - 1988804

Please be informed that the data shown in this PDF Document is generated from our Online Catalog. Please find the complete data in the user's documentation. Our General Terms of Use for Downloads are valid (http://download.phoenixcontact.com)

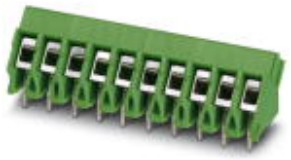

The figure shows a 10-position version of the product

PCB terminal block, Nominal current: 17.5 A, Nom. voltage: 400 V, Pitch: 5 mm, Number of positions: 2, Connection method: Screw connection, Mounting: Soldering, Conductor/PCB connection direction: 45 °, Color: green

## Product Features

- 5.0 mm pitch
- Large terminal block capacity thanks to rectangular clamping space
- Rugged version with high current carrying capacity
- Highly flexible conductor protection for easy, repeated connection
- Plus/minus screw

## Key commercial data

| | |
|---|---|
| **package_quantity** | 250 |
| **GTIN** | 4046356036795 |

## Technical data

### Dimensions

| | |
|---|---|
| **Pitch** | 5 mm |
| **Dimension a** | 5 mm |
| **Pin dimensions** | 1,0 mm |
| **Pin spacing** | 5 mm |
| **Hole diameter** | 1.3 mm |

### General

| | |
|---|---|
| **Range of articles** | PTA 1,5 |
| **Insulating material group** | I |
| **Rated surge voltage (III/3)** | 4 kV |
| **Rated surge voltage (III/2)** | 4 kV |
| **Rated surge voltage (II/2)** | 4 kV |
| **Rated voltage (III/3)** | 250 V |
| **Rated voltage (III/2)** | 400 V |
| **Rated voltage (II/2)** | 630 V |
| **Connection in acc. with standard** | EN-VDE |
| **Nominal current $I_N$** | 17.5 A |
| **Nominal cross section** | 1.5 mm² |

# Screw compact terminal block - PTA 1,5/ 2-5,0 - 1988804

## Technical data

### General

| | |
|---|---|
| **Maximum load current** | 24 A |
| **Insulating material** | PA |
| **Solder pin surface** | Sn |
| **Inflammability class according to UL 94** | V0 |
| **Internal cylindrical gage** | A1 / B1 |
| **Stripping length** | 5 mm |
| **Number of positions** | 2 |
| **Screw thread** | M2,6 |
| **Tightening torque, min** | 0.35 Nm |
| **Tightening torque max** | 0.4 Nm |

### Connection data

| | |
|---|---|
| **Conductor cross section solid min.** | 0.14 mm² |
| **Conductor cross section solid max.** | 2.5 mm² |
| **Conductor cross section stranded min.** | 0.14 mm² |
| **Conductor cross section stranded max.** | 2.5 mm² |
| **Conductor cross section stranded, with ferrule without plastic sleeve min.** | 0.25 mm² |
| **Conductor cross section stranded, with ferrule without plastic sleeve max.** | 1.5 mm² |
| **Conductor cross section stranded, with ferrule with plastic sleeve min.** | 0.25 mm² |
| **Conductor cross section stranded, with ferrule with plastic sleeve max.** | 1.5 mm² |
| **Conductor cross section AWG/kcmil min.** | 26 |
| **Conductor cross section AWG/kcmil max** | 14 |
| **2 conductors with same cross section, solid min.** | 0.14 mm² |
| **2 conductors with same cross section, solid max.** | 1 mm² |
| **2 conductors with same cross section, stranded min.** | 0.14 mm² |
| **2 conductors with same cross section, stranded max.** | 0.75 mm² |
| **2 conductors with same cross section, stranded, ferrules without plastic sleeve, min.** | 0.25 mm² |
| **2 conductors with same cross section, stranded, ferrules without plastic sleeve, max.** | 0.34 mm² |
| **2 conductors with same cross section, stranded, TWIN ferrules with plastic sleeve, min.** | 0.25 mm² |
| **2 conductors with same cross section, stranded, TWIN ferrules with plastic sleeve, max.** | 0.75 mm² |
| **Minimum AWG according to UL/CUL** | 26 |
| **Maximum AWG according to UL/CUL** | 12 |

## classifications

### eCl@ss

| | |
|---|---|
| **eCl@ss 4.0** | 272607xx |

# Screw compact terminal block - PTA 1,5/ 2-5,0 - 1988804

## classifications

### eCl@ss

| | |
|---|---|
| **eCl@ss 4.1** | 27141109 |
| **eCl@ss 5.0** | 27141190 |
| **eCl@ss 5.1** | 27141190 |
| **eCl@ss 6.0** | 27261101 |
| **eCl@ss 7.0** | 27440401 |
| **eCl@ss 8.0** | 27440401 |

### ETIM

| | |
|---|---|
| **ETIM 3.0** | EC001121 |
| **ETIM 4.0** | EC002643 |
| **ETIM 5.0** | EC002643 |

### UNSPSC

| | |
|---|---|
| **UNSPSC 6.01** | 30211801 |
| **UNSPSC 7.0901** | 39121432 |
| **UNSPSC 11** | 34131203 |
| **UNSPSC 12.01** | 39121432 |
| **UNSPSC 13.2** | 39121432 |

## approvals

UL Recognized / cUL Recognized / VDE Gutachten mit Fertigungsüberwachung / CCA / IECEE CB Scheme / GOST / GOST / cULus Recognized /

### Approval details

**UL Recognized**

| **Usegroups** | **B** | **D** |
|---|---|---|
| Nominal voltage UN | 300 V | 300 V |
| Nominal current IN | 15 A | 10 A |
| mm²/AWG/kcmil | 26-12 | 26-12 |

**cUL Recognized**

| **Usegroups** | **B** | **D** |
|---|---|---|
| Nominal voltage UN | 300 V | 300 V |
| Nominal current IN | 15 A | 10 A |
| mm²/AWG/kcmil | 26-12 | 26-12 |

# Screw compact terminal block - PTA 1,5/ 2-5,0 - 1988804

## approvals

**VDE Gutachten mit Fertigungsüberwachung**

| | |
|---|---|
| Nominal voltage UN | 250 V |
| Nominal current IN | 24 A |
| mm²/AWG/kcmil | 0.2-2.5 |

**CCA**

| | |
|---|---|
| Nominal voltage UN | 250 V |
| Nominal current IN | 24 A |
| mm²/AWG/kcmil | 0.2-2.5 |

**IECEE CB Scheme**

| | |
|---|---|
| Nominal voltage UN | 250 V |
| Nominal current IN | 24 A |
| mm²/AWG/kcmil | 0.2-2.5 |

**GOST**

**cULus Recognized**

## accessories

**Screwdriver tools**

SZS 0,6X3,5 - 1205053



# Screw compact terminal block - PTA 1,5/ 2-5,0 - 1988804

accessories

**Labeled terminal marker**

SK 5/3,8:FORTL.ZAHLEN - 0804183



## Drawings

Drilling diagram

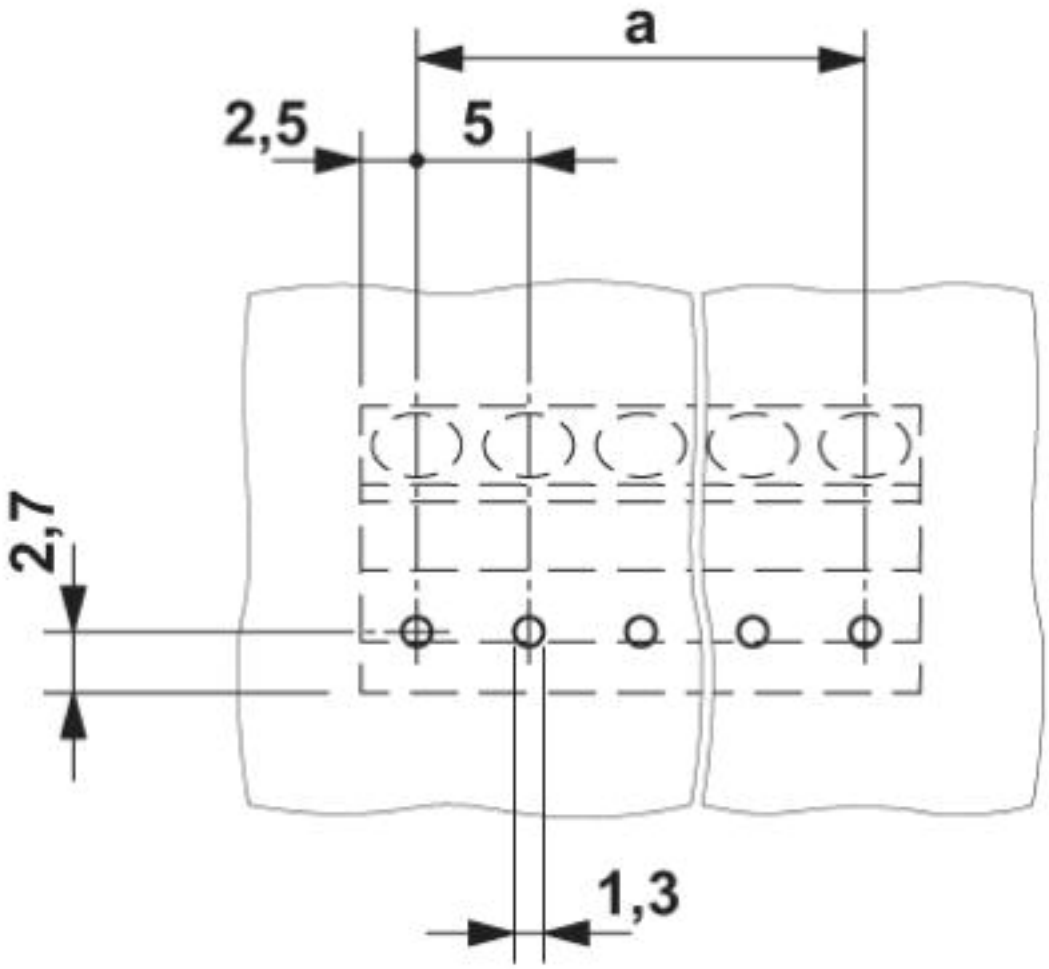

# Screw compact terminal block - PTA 1,5/ 2-5,0 - 1988804

Diagram

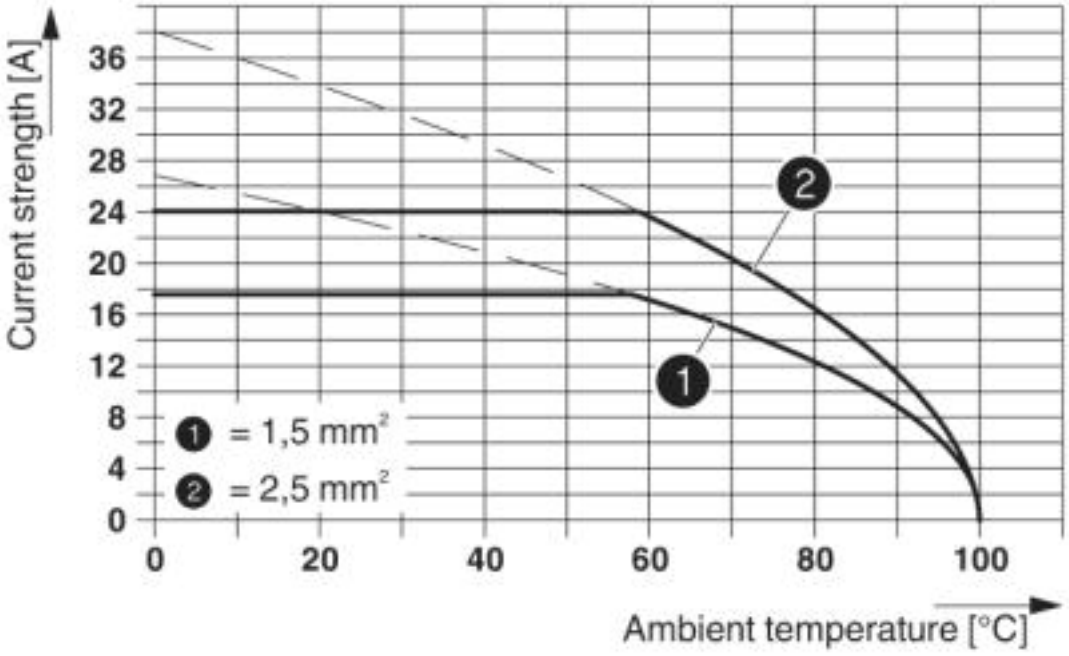


Dimensioned drawing

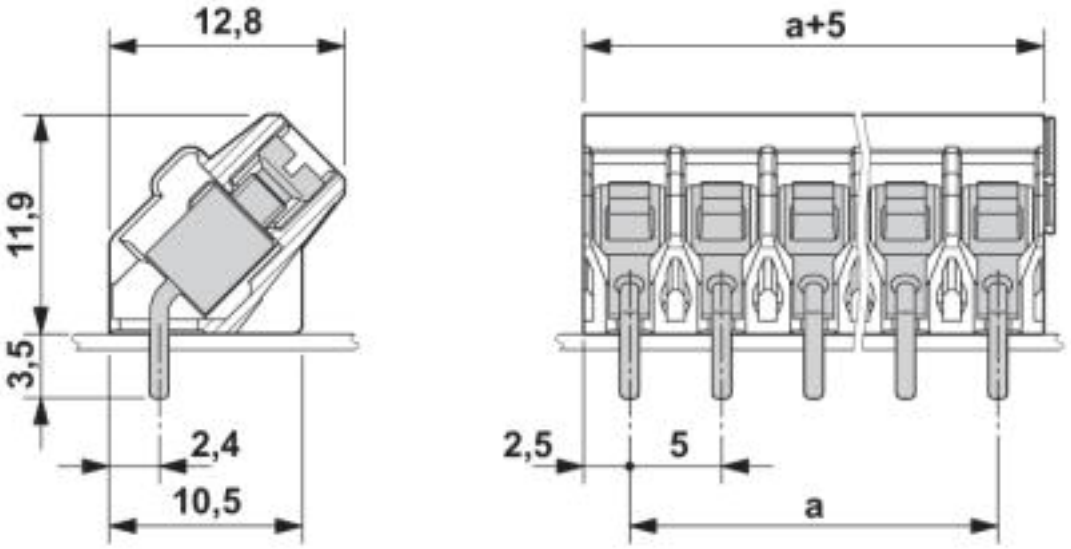

# Screw compact terminal block - PTA 1,5/ 2-5,0 - 1988804

Dimensioned drawing

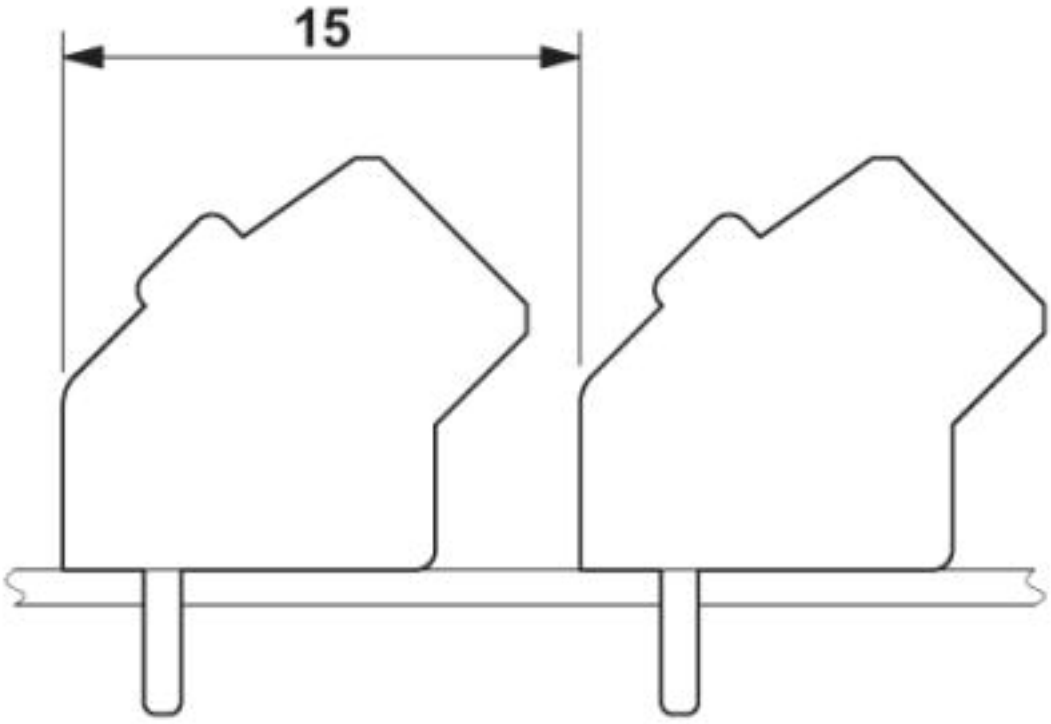


© Phoenix Contact 2013 - all rights reserved
http://www.phoenixcontact.com