Base strip - DFK-MSTB 2,5/ 9-G-5,08 - 0707303

Please be informed that the data shown in this PDF Document is generated from our Online Catalog. Please find the complete data in the user's documentation. Our General Terms of Use for Downloads are valid (http://download.phoenixcontact.com)



The figure shows a 10-position version of the product

Plug component, Nominal current: 12 A, Rated voltage (III/2): 320 V, Number of positions: 9, Pitch: 5.08 mm, Connection method: Solder/Slip-on connection, Color: green, Contact surface: Tin, Assembly: Direct mounting, Accessory order no. 5030172 can only be used in conjunction with MSTB 2,5/...ST-5,08 and MSTBT 2,5/...ST-5,08.

Product Features

- Can be fixed in housing panels up to 6 mm thick using two M3 x 10 screws
- Outside: plug-in connection for corresponding MSTB 2,5 or FKC 2,5 plugs
- Headers for assembly in a device/housing panel
- Inside: solder or 2.8 mm slip-on plug-in connection that can be combined

Key commercial data

package_quantity	50
GTIN	4017918004071

Technical data

Dimensions

Pitch	5.08 mm
Dimension a	40.64 mm

General

Range of articles	DFK-MSTB 2,5/..-G
Insulating material group	I
Rated surge voltage (III/3)	4 kV
Rated surge voltage (III/2)	4 kV
Rated surge voltage (II/2)	4 kV
Rated voltage (III/3)	320 V
Rated voltage (III/2)	320 V
Rated voltage (II/2)	630 V
Connection in acc. with standard	EN-VDE
Nominal current I_N	12 A
Nominal cross section	2.5 mm²
Maximum load current	12 A
Insulating material	PA
Inflammability class according to UL 94	V2
Number of positions	9

Base strip - DFK-MSTB 2,5/ 9-G-5,08 - 0707303

Technical data

Connection data

Conductor cross section solid min.	0.2 mm²
Conductor cross section solid max.	2.5 mm²
Conductor cross section stranded min.	0.2 mm²
Conductor cross section stranded max.	2.5 mm²
Conductor cross section AWG/kcmil min.	24
Conductor cross section AWG/kcmil max	12

classifications

eCl@ss

eCl@ss 4.0	272607xx
eCl@ss 4.1	27260701
eCl@ss 5.0	27260701
eCl@ss 5.1	27141190
eCl@ss 6.0	27260704
eCl@ss 7.0	27440402
eCl@ss 8.0	27440402

ETIM

ETIM 3.0	EC001283
ETIM 4.0	EC001283
ETIM 5.0	EC001283

UNSPSC

UNSPSC 6.01	30211810
UNSPSC 7.0901	39121409
UNSPSC 11	39121409
UNSPSC 12.01	39121409
UNSPSC 13.2	39121409

approvals

CSA / UL Recognized / VDE Gutachten mit Fertigungsüberwachung / cUL Recognized / GOST / IECEE CB Scheme / GOST / CSA / CCA / cULus Recognized /

Approval details

CSA

Usegroups	**B**	**D**
Nominal voltage UN	300 V	300 V
Nominal current IN	15 A	10 A

Base strip - DFK-MSTB 2,5/ 9-G-5,08 - 0707303

approvals

Usegroups	B	D
mm²/AWG/kcmil		

UL Recognized

Usegroups	B	D
Nominal voltage UN	300 V	300 V
Nominal current IN	15 A	10 A
mm²/AWG/kcmil		

VDE Gutachten mit Fertigungsüberwachung

Nominal voltage UN	250 V
Nominal current IN	12 A
mm²/AWG/kcmil	

cUL Recognized

Usegroups	B	D
Nominal voltage UN	300 V	300 V
Nominal current IN	15 A	10 A
mm²/AWG/kcmil		

GOST

IECEE CB Scheme

Nominal voltage UN	250 V
Nominal current IN	12 A
mm²/AWG/kcmil	

Base strip - DFK-MSTB 2,5/ 9-G-5,08 - 0707303

approvals

Usegroups	B	D
Nominal voltage UN	300 V	300 V
Nominal current IN	10 A	10 A
mm²/AWG/kcmil		

CCA	
Nominal voltage UN	250 V
Nominal current IN	12 A
mm²/AWG/kcmil	

cULus Recognized

accessories

Mounting material

DFK-MSTB-SS - 0708263



Coding element

CR-MSTB - 1734401



Filler plug

Base strip - DFK-MSTB 2,5/ 9-G-5,08 - 0707303

accessories

MSTB-BL - 1755477



accessories

DFK-MSTB-R - 5030172



Drawings

Base strip - DFK-MSTB 2,5/ 9-G-5,08 - 0707303

Drilling diagram

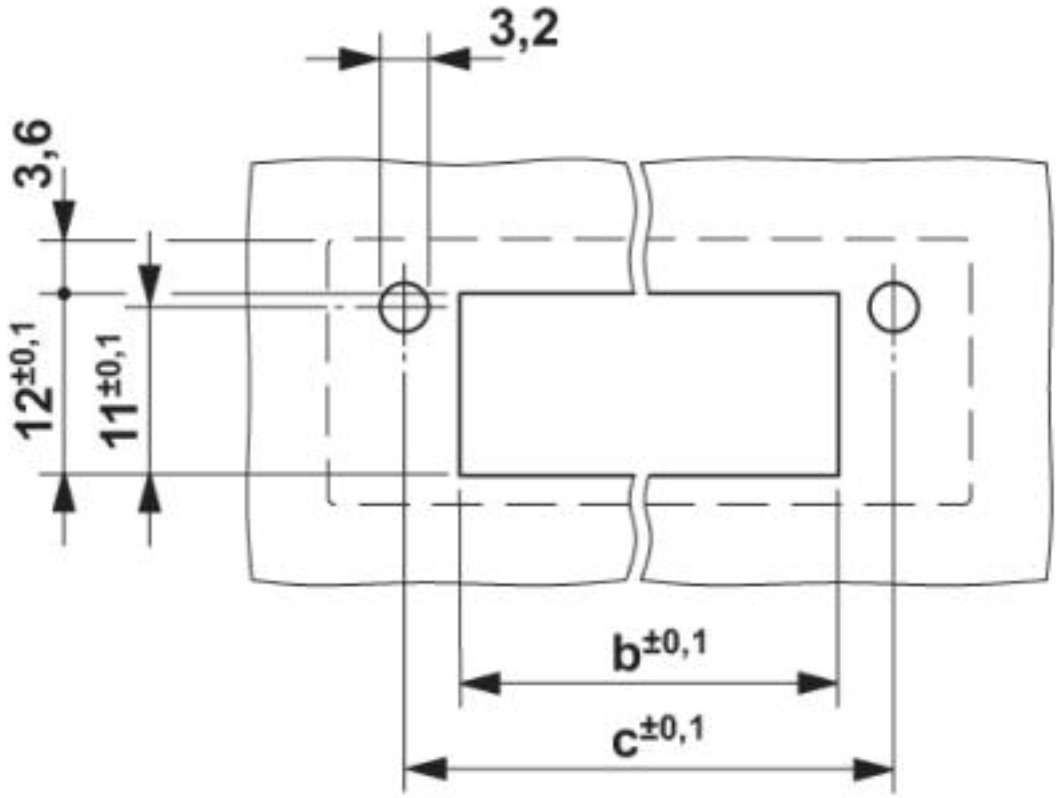

Dimension b: 3.02 mm + (no. of pos. x 5.08 mm)Dimension c: Dim. b + 7.14 mm

Dimensioned drawing

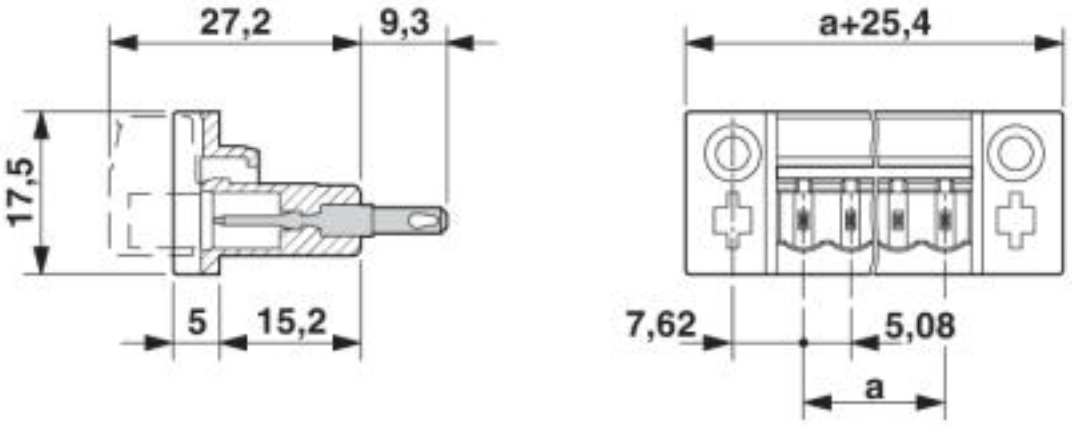

© Phoenix Contact 2013 - all rights reserved
http://www.phoenixcontact.com