Printed-circuit board connector - ZEC 1,0/ 3-ST-3,5 C1 R1,3 - 1893698

Please be informed that the data shown in this PDF Document is generated from our Online Catalog. Please find the complete data in the user's documentation. Our General Terms of Use for Downloads are valid (http://download.phoenixcontact.com)



The figure shows a 10-position version of the product

Direct connector, Nominal current: 8 A, Rated voltage (III/2): 200 V, Number of positions: 3, Pitch: 3.5 mm, Connection method: Spring-cage conn., Color: green, Contact surface: Tin, Assembly: Direct connector

Product Features

- Larger numbers of positions available on request
- Chamfer in the plug-in area has a positive effect on insertion and withdrawal forces/cycles
- Contact made directly on a 1.6 mm thick PCB without additional pin strips

Key commercial data

package_quantity	50
GTIN	4017918161248

Technical data

Dimensions

Pitch	3.5 mm
Dimension a	10.5 mm

General

Range of articles	ZEC 1,0/..-ST
Insulating material group	I
Rated surge voltage (III/3)	2.5 kV
Rated surge voltage (III/2)	2.5 kV
Rated surge voltage (II/2)	2.5 kV
Rated voltage (III/3)	160 V
Rated voltage (III/2)	200 V
Rated voltage (II/2)	320 V
Connection in acc. with standard	EN-VDE
Nominal current I_N	8 A
Nominal cross section	1 mm²
Maximum load current	8 A (with 1 mm² conductor cross section)
Insulating material	PA
Inflammability class according to UL 94	V0

Printed-circuit board connector - ZEC 1,0/ 3-ST-3,5 C1 R1,3 - 1893698

Technical data

General

Stripping length	7 mm
Number of positions	3

Connection data

Conductor cross section solid min.	0.2 mm²
Conductor cross section solid max.	1 mm²
Conductor cross section stranded min.	0.2 mm²
Conductor cross section stranded max.	1 mm²
Conductor cross section stranded, with ferrule without plastic sleeve min.	0.25 mm²
Conductor cross section stranded, with ferrule without plastic sleeve max.	1 mm²
Conductor cross section stranded, with ferrule with plastic sleeve min.	0.25 mm²
Conductor cross section stranded, with ferrule with plastic sleeve max.	0.75 mm²
Conductor cross section AWG/kcmil min.	24
Conductor cross section AWG/kcmil max	16
2 conductors with same cross section, stranded, TWIN ferrules with plastic sleeve, min.	0.5 mm²
2 conductors with same cross section, stranded, TWIN ferrules with plastic sleeve, max.	0.5 mm²
Minimum AWG according to UL/CUL	26
Maximum AWG according to UL/CUL	16

classifications

eCl@ss

eCl@ss 4.0	272607xx
eCl@ss 4.1	27260701
eCl@ss 5.0	27260701
eCl@ss 5.1	27260701
eCl@ss 6.0	27260704
eCl@ss 7.0	27440402
eCl@ss 8.0	27440402

ETIM

ETIM 3.0	EC001121
ETIM 4.0	EC002637
ETIM 5.0	EC002637

UNSPSC

UNSPSC 6.01	30211810
UNSPSC 7.0901	39121409

Printed-circuit board connector - ZEC 1,0/ 3-ST-3,5 C1 R1,3 - 1893698

classifications

UNSPSC

UNSPSC 11	39121409
UNSPSC 12.01	39121409
UNSPSC 13.2	39121409

approvals

UL Recognized / VDE Gutachten mit Fertigungsüberwachung / cUL Recognized / IECEE CB Scheme / GOST / GOST / cULus Recognized /

Approval details

UL Recognized

Usegroups	**B**
Nominal voltage UN	150 V
Nominal current IN	8 A
mm²/AWG/kcmil	26-16

VDE Gutachten mit Fertigungsüberwachung

Nominal voltage UN	160 V
Nominal current IN	8 A
mm²/AWG/kcmil	0.2-1

cUL Recognized

Usegroups	**B**
Nominal voltage UN	150 V
Nominal current IN	8 A
mm²/AWG/kcmil	26-16

IECEE CB Scheme

Printed-circuit board connector - ZEC 1,0/ 3-ST-3,5 C1 R1,3 - 1893698

approvals

GOST

cULus Recognized

accessories

Screwdriver tools

SZF 0-0,4X2,5 - 1204504



Labeled terminal marker

SK 3,5/2,8:FORTL.ZAHLEN - 0804073



Drawings

Printed-circuit board connector - ZEC 1,0/ 3-ST-3,5 C1 R1,3 - 1893698

Drilling diagram

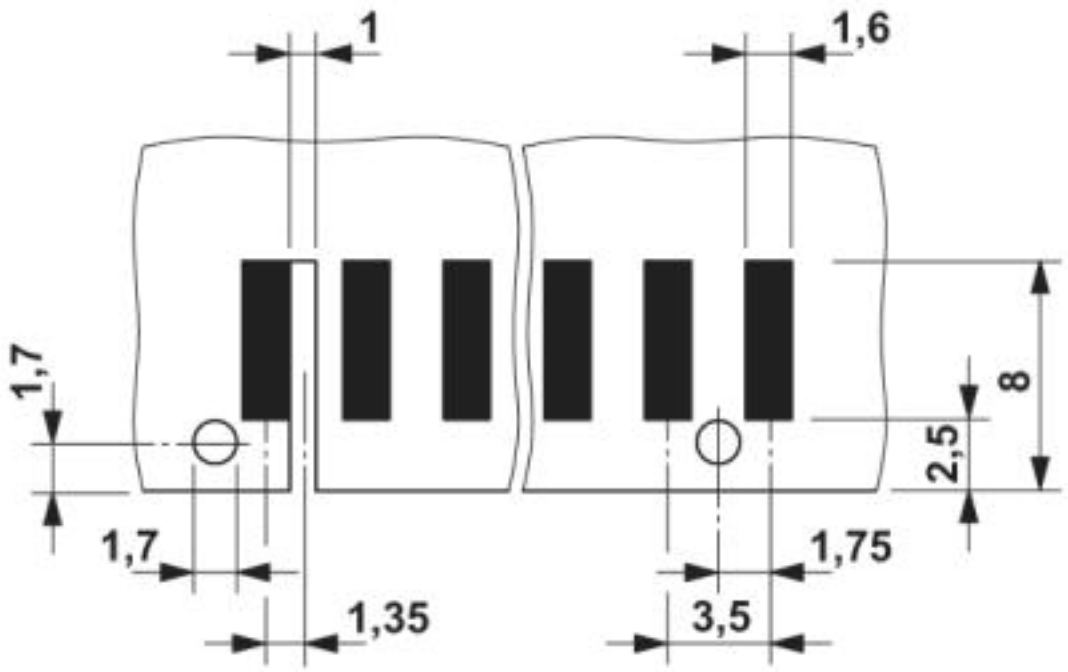

Size of the PCB: 1.6 ± 0.2 mm

Dimensioned drawing

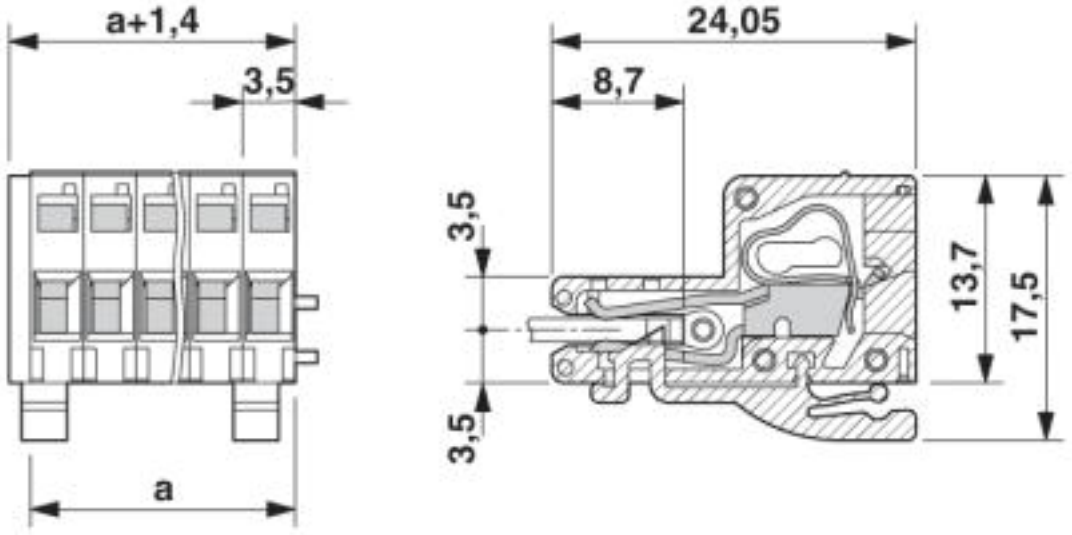

© Phoenix Contact 2013 - all rights reserved
http://www.phoenixcontact.com