Bus system cable - SAC-2P-M12MSB/ 4,0-910/M12FSB - 1529221

Please be informed that the data shown in this PDF Document is generated from our Online Catalog. Please find the complete data in the user's documentation. Our General Terms of Use for Downloads are valid (http://download.phoenixcontact.com)



Bus system cable, PROFIBUS, PROFIBUS, 2-position, PUR halogen-free, Violet, RAL 4001, shielded, Plug straight M12, B-coded, on Socket straight M12, B-coded, Cable length: 4 m

Key commercial data

package_quantity	1
GTIN	4017918989392

Technical data

Dimensions

Length of cable	4 m

Ambient conditions

Degree of protection	IP65
Degree of protection	IP67
Degree of protection	IP68

General

Rated current at 40°C	4 A
Rated voltage	250 V
Number of positions	2
Contact resistance	≤ 5 mΩ
Insulation resistance	≥ 100 MΩ
Coding	B - inverse
Signal type/category	PROFIBUS
Status display	No
Surge voltage category	II
Pollution degree	3
Insertion/withdrawal cycles	≥ 100

Material

Inflammability class according to UL 94	V0
Contact material	CuSn
Contact surface material	Ni/Au
Contact carrier material	PA 66

Bus system cable - SAC-2P-M12MSB/ 4,0-910/M12FSB - 1529221

Technical data

Material

Material of grip body	TPU, hardly inflammable, self-extinguishing
Material, knurls	Zinc die-cast, nickel-plated
Sealing material	NBR

Cable

Cable type	PROFIBUS
Cable type (abbreviation)	910
UL AWM style	21198 (80°C/300 V)
Conductor cross section	2x 0.25 mm² (signal line)
AWG signal line	24
Conductor structure signal line	19x 0.13 mm
Core diameter including insulation	2.55 mm ±0.07 mm
Wire colors	Red, green
Overall twist	2 cores with 2 fillers to the core
Shielding	Plastic-coated aluminum foil, tinned copper braided shield
Optical shield covering	85 %
External sheath, color	Violet, RAL 4001
External cable diameter D	7.8 mm ± 0.2 mm
Number of bending cycles	4000000
Bending radius	65 mm
Traversing path	4.5 m
Traversing rate	3 m/s
Acceleration	3 m/s²
Max. bending cycles	5000000
Bending radius	80 mm
Traversing path	4.5 m
Traversing rate	3 m/s
Acceleration	3 m/s²
Outer sheath, material	PUR
Material conductor insulation	Foamed PE
Conductor material	Tin-plated Cu litz wires
Insulation resistance	≥ 5 GΩ*km
Conductor resistance	157.2 Ω/km
Working capacitance	30 nF
Wave impedance	nom. 150 Ω ±10 % (3 MHz ... 20 MHz)
Shield attenuation	≤ 4.9 dB (at 16 MHz)
Nominal voltage, cable	30 V
Test voltage Core/Core	1500 V (50 Hz, 1 min.)
Test voltage Core/Shield	1500 V (50 Hz, 1 min.)
Flame resistance	UL 1581, Sec. 1060 (FT-1)
Flame resistance	IEC 60332-1
Other resistance	Low adhesion

Bus system cable - SAC-2P-M12MSB/ 4,0-910/M12FSB - 1529221

Technical data

Cable

Ambient temperature (operation)	-40 °C ... 80 °C (cable, fixed installation)
Ambient temperature (operation)	-30 °C ... 70 °C (cable, flexible installation)

classifications

eCl@ss

eCl@ss 4.0	27060306
eCl@ss 4.1	27060306
eCl@ss 5.0	27061801
eCl@ss 5.1	27061801
eCl@ss 6.0	27061801
eCl@ss 7.0	27061801
eCl@ss 8.0	27061801

ETIM

ETIM 2.0	EC000830
ETIM 3.0	EC001855
ETIM 4.0	EC001855
ETIM 5.0	EC001855

UNSPSC

UNSPSC 6.01	31251501
UNSPSC 7.0901	31251501
UNSPSC 11	31251501
UNSPSC 12.01	31251501
UNSPSC 13.2	31251501

Drawings

Dimensioned drawing

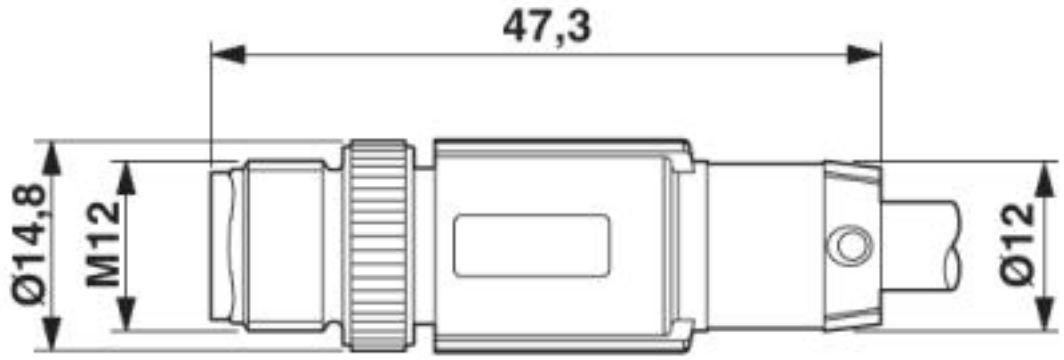

Plug, M12 x 1, straight, shielded

Bus system cable - SAC-2P-M12MSB/ 4,0-910/M12FSB - 1529221

Dimensioned drawing

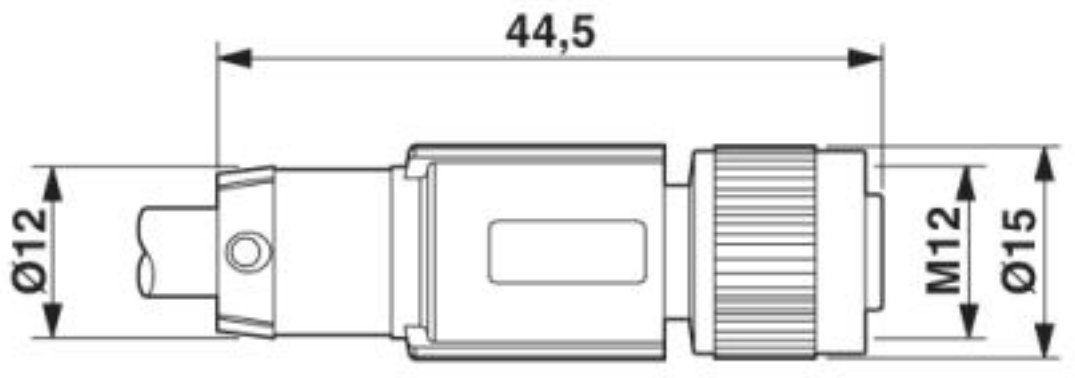

M12 x 1 socket, straight, shielded

Circuit diagram

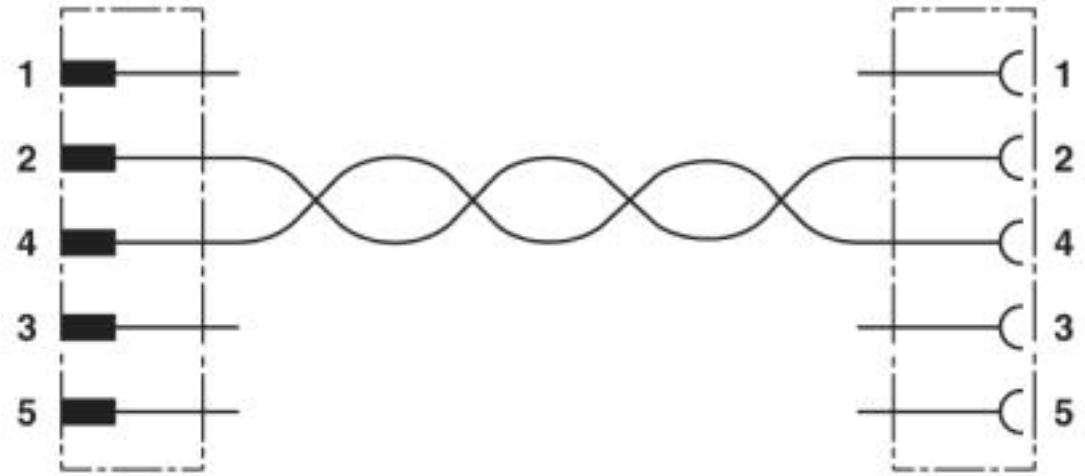

Contact assignment of the M12 connector and the M12 socket

Bus system cable - SAC-2P-M12MSB/ 4,0-910/M12FSB - 1529221

Schematic diagram

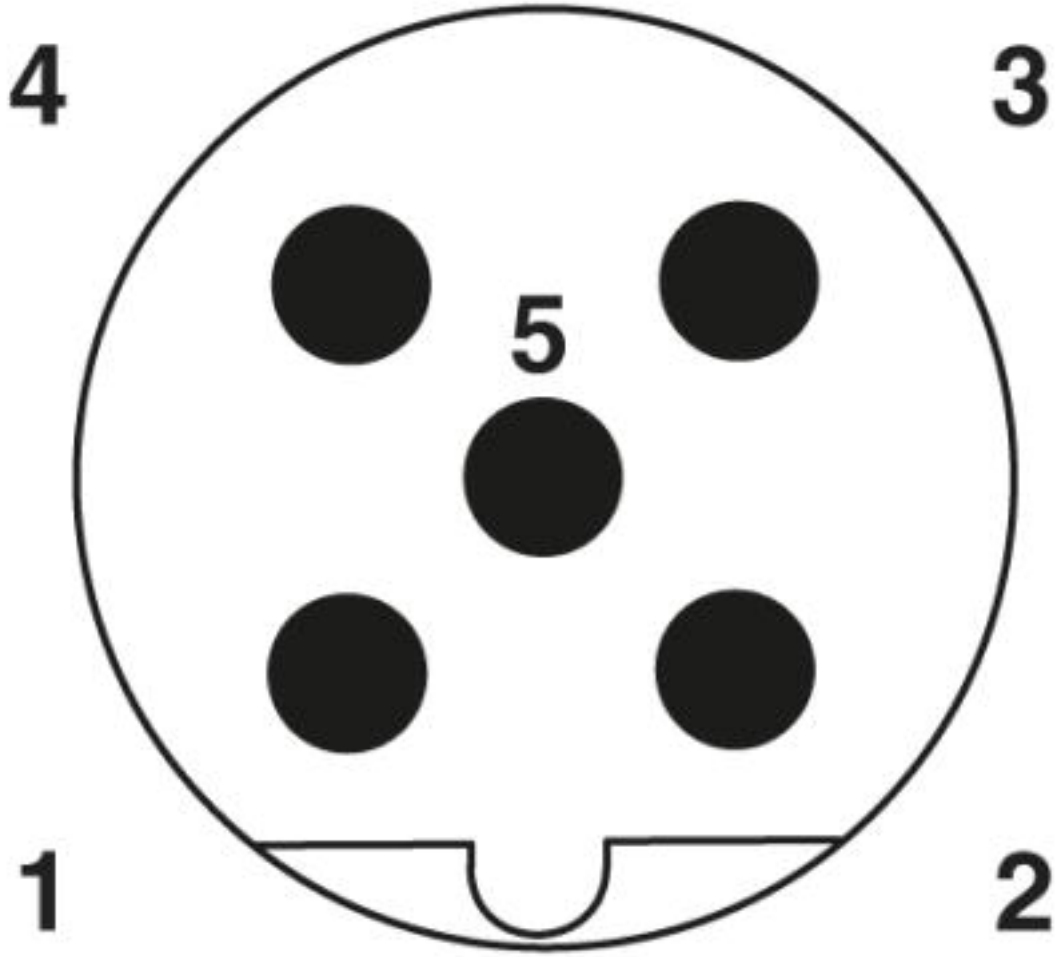

Pin assignment M12 male connector, 5-pos., B-coded, male side

Bus system cable - SAC-2P-M12MSB/ 4,0-910/M12FSB - 1529221

Schematic diagram

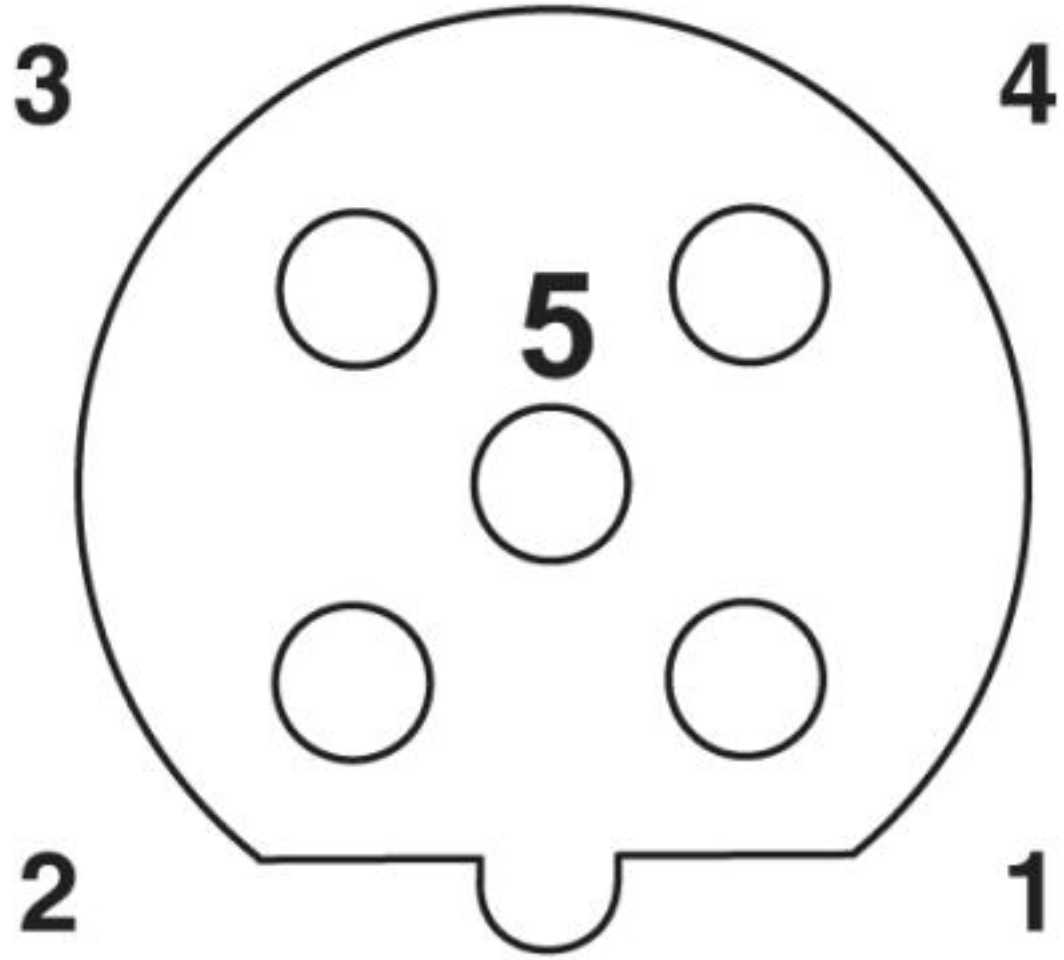

Pin assignment M12 socket, 5-pos., B-coded, female side

Bus system cable - SAC-2P-M12MSB/ 4,0-910/M12FSB - 1529221

Cable cross section

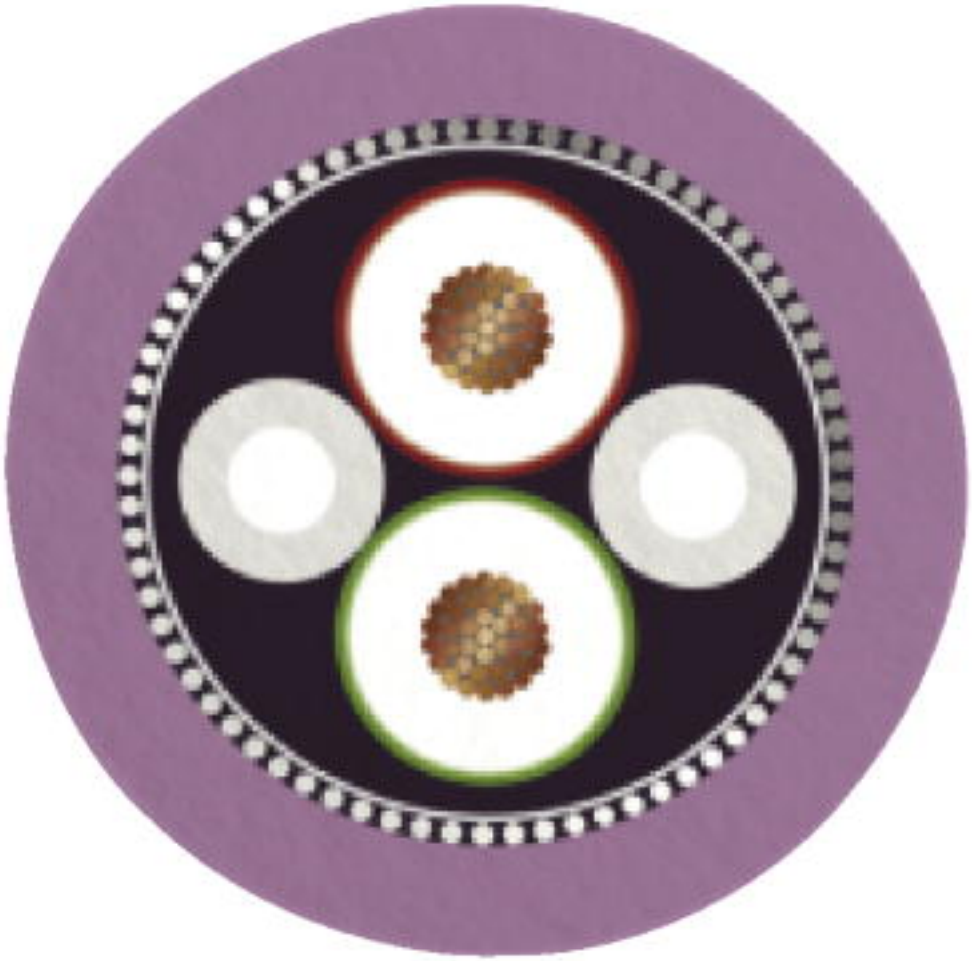

PROFIBUS [910]

© Phoenix Contact 2013 - all rights reserved
http://www.phoenixcontact.com