Connector - SACC-M12MS-4CON-PG11-M PWR - 1404415

Please be informed that the data shown in this PDF Document is generated from our Online Catalog. Please find the complete data in the user's documentation. Our General Terms of Use for Downloads are valid (http://download.phoenixcontact.com)



Connector, Universal, 4-position, Plug straight M12, A-coded, Screw connection, Knurl material: Zinc die-cast, nickel-plated, Cable gland Pg11, External cable diameter 8 mm ... 10 mm

Product Features

- Safe use in the field, thanks to a high degree of protection
- Flexible: connectors for on-site assembly
- Screw connection: proven connection technology for a large selection of different conductors

Key commercial data

package_quantity	1
GTIN	4046356694476

Technical data

Dimensions

External diameter	8 mm ... 10 mm

Ambient conditions

Degree of protection	IP67

General

Note	Strip 22 mm off the cable sheath, strip 7 mm off the conductor insulation, crimp the ferrule, then shorten this to 5 mm. Length of conductor with shortened ferrule: 20 mm. Connect conductors and tighten the mounting screws with 0.2 Nm.
Rated current at 40°C	8 A
Rated voltage	250 V
Number of positions	4
Contact resistance	≤ 3 mΩ
Insulation resistance	> 10 GΩ
Coding	A - standard
Standards/regulations	M12 connector IEC 61076-2-101
Signal type/category	Universal
Status display	No
Surge voltage category	II
Pollution degree	3
Connection method	Screw connection
Conductor cross section	1.5 mm²

Connector - SACC-M12MS-4CON-PG11-M PWR - 1404415

Technical data

General

AWG conductor cross section	16
Insertion/withdrawal cycles	≥ 100
Torque	0.4 Nm (M12 knurl)
Torque	1 Nm ... 1.4 Nm (Pressure nut with coupling sleeve)
Torque	0.4 Nm (Connector with coupling sleeve)
Torque	0.2 Nm (Screw terminal blocks)
Assembly instructions	The wires can be connected both with ferrules and without ferrules

Material

Inflammability class according to UL 94	V0
Contact material	CuZn
Contact surface material	Au
Contact carrier material	PA
Material of grip body	PA
Material, knurls	Zinc die-cast, nickel-plated

classifications

eCl@ss

eCl@ss 4.0	27140815
eCl@ss 4.1	27140815
eCl@ss 5.0	27260701
eCl@ss 5.1	27260701
eCl@ss 6.0	27279221
eCl@ss 7.0	27440104
eCl@ss 8.0	27440104

ETIM

ETIM 2.0	EC001121
ETIM 3.0	EC002062
ETIM 4.0	EC002062
ETIM 5.0	EC002062

UNSPSC

UNSPSC 6.01	31251501
UNSPSC 7.0901	31251501
UNSPSC 11	31251501
UNSPSC 12.01	31251501
UNSPSC 13.2	31251501

accessories

Torque tool

Connector - SACC-M12MS-4CON-PG11-M PWR - 1404415

accessories

TSD 04 SAC - 1208429



Screwdriver tools

SACC BIT M12-D20 - 1208445



Stripping tool

WIREFOX 6SC - 1212158



Crimping tool

CRIMPFOX 6H - 1212046



Connector

A 1,5 - 7 - 3200263



Connector - SACC-M12MS-4CON-PG11-M PWR - 1404415

accessories

Drawings

Dimensioned drawing

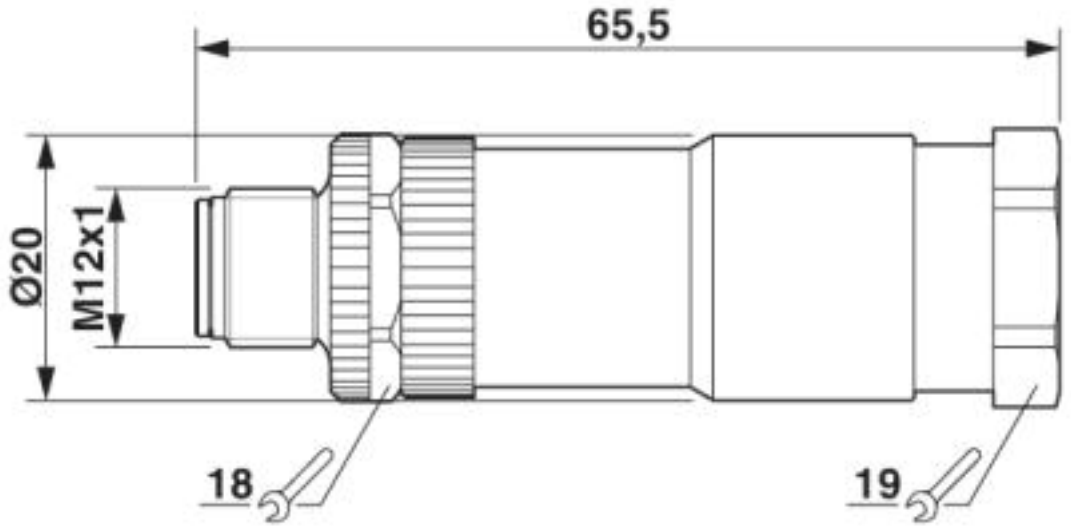

M12 x 1 plug, straight

Connector - SACC-M12MS-4CON-PG11-M PWR - 1404415

Schematic diagram

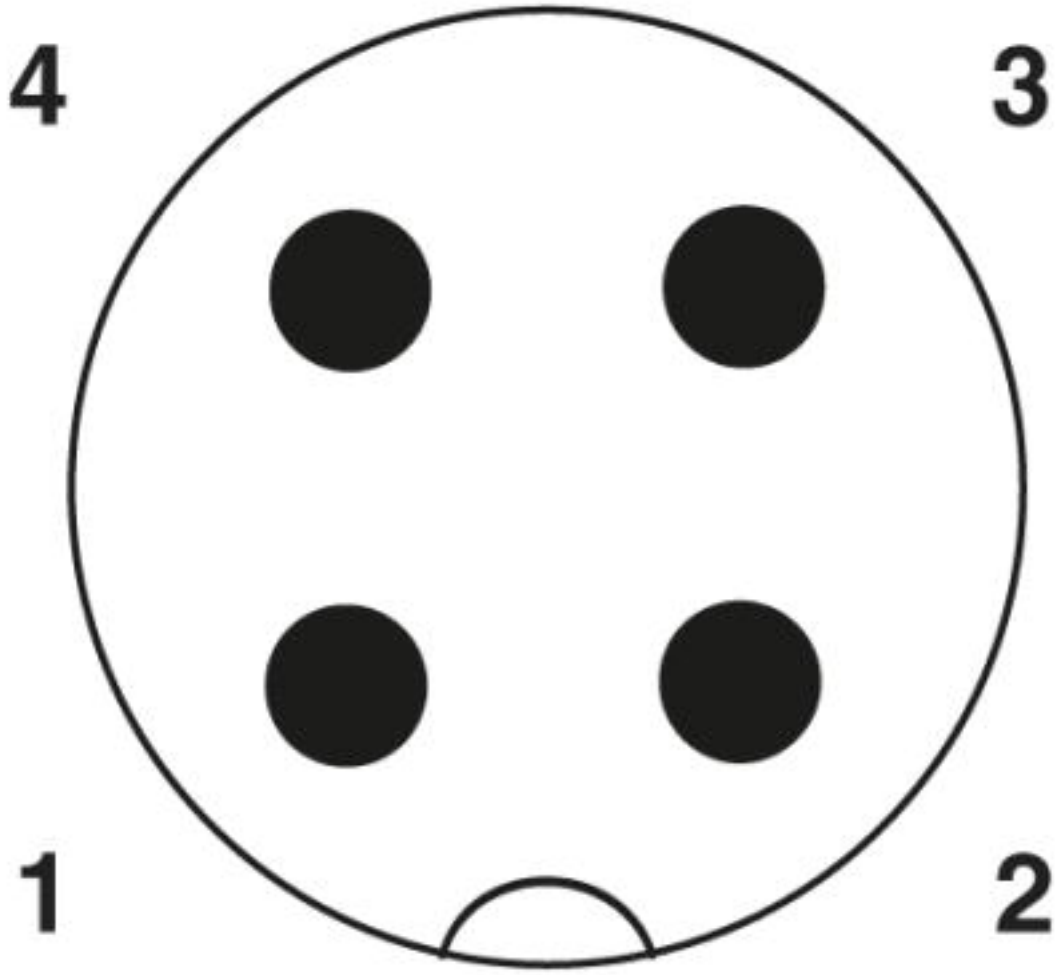

Pin assignment M12 plug, 4-pos., A-coded, view plug side

© Phoenix Contact 2013 - all rights reserved
http://www.phoenixcontact.com