Bus system flush-type socket - SACCBP-FSB-2CON-PG9/5,0-910SCO - 1437478

Please be informed that the data shown in this PDF Document is generated from our Online Catalog. Please find the complete data in the user's documentation. Our General Terms of Use for Downloads are valid (http://download.phoenixcontact.com)



Bus system flush-type socket, PROFIBUS, 2-pos., M12, shielded, B-coded, SPEEDCON, rear/screw mounting with Pg9 thread, with 5.0 m bus cable, 2 x 0.25 mm²

Key commercial data

package_quantity	1
GTIN	4046356457606

Technical data

Dimensions

Length of cable	5 m

Ambient conditions

Ambient temperature (operation)	-25 °C ... 85 °C (Plug / socket)
Degree of protection	IP67

General

Rated current at 40°C	4 A
Rated voltage	60 V
Number of positions	2
Contact resistance	≤ 3 mΩ
Insulation resistance	≥ 100 MΩ
Coding	B - inverse
Standards/regulations	M12 connector IEC 61076-2-101
Signal type/category	PROFIBUS
Status display	No
Surge voltage category	II
Pollution degree	3

Material

Inflammability class according to UL 94	V0
Contact material	CuZn
Contact surface material	Ni/Au

Bus system flush-type socket - SACCBP-FSB-2CON-PG9/5,0-910SCO - 1437478

Technical data

Material

Contact carrier material	PA 66
Material, knurls	Zinc die-cast, nickel-plated
Sealing material	NBR

Cable

Cable type	PROFIBUS
Cable type (abbreviation)	910
UL AWM style	21198 (80°C/300 V)
Conductor cross section	2x 0.25 mm² (signal line)
AWG signal line	24
Conductor structure signal line	19x 0.13 mm
Core diameter including insulation	2.55 mm ±0.07 mm
Wire colors	Red, green
Overall twist	2 cores with 2 fillers to the core
Shielding	Plastic-coated aluminum foil, tinned copper braided shield
Optical shield covering	85 %
External sheath, color	Violet, RAL 4001
External cable diameter D	7.8 mm ± 0.2 mm
Number of bending cycles	4000000
Bending radius	65 mm
Traversing path	4.5 m
Traversing rate	3 m/s
Acceleration	3 m/s²
Max. bending cycles	5000000
Bending radius	80 mm
Traversing path	4.5 m
Traversing rate	3 m/s
Acceleration	3 m/s²
Outer sheath, material	PUR
Material conductor insulation	Foamed PE
Conductor material	Tin-plated Cu litz wires
Insulation resistance	≥ 5 GΩ*km
Conductor resistance	157.2 Ω/km
Working capacitance	30 nF
Wave impedance	nom. 150 Ω ±10 % (3 MHz ... 20 MHz)
Shield attenuation	≤ 4.9 dB (at 16 MHz)
Nominal voltage, cable	30 V
Test voltage Core/Core	1500 V (50 Hz, 1 min.)
Test voltage Core/Shield	1500 V (50 Hz, 1 min.)
Flame resistance	UL 1581, Sec. 1060 (FT-1)

Bus system flush-type socket - SACCBP-FSB-2CON-PG9/5,0-910SCO - 1437478

Technical data

Cable

Flame resistance	IEC 60332-1
Other resistance	Low adhesion
Ambient temperature (operation)	-40 °C ... 80 °C (cable, fixed installation)
Ambient temperature (operation)	-30 °C ... 70 °C (cable, flexible installation)

classifications

eCl@ss

eCl@ss 4.0	27250313
eCl@ss 4.1	27250313
eCl@ss 5.0	27143423
eCl@ss 5.1	27143423
eCl@ss 6.0	27143423
eCl@ss 7.0	27449001
eCl@ss 8.0	27449001

ETIM

ETIM 3.0	EC002061
ETIM 4.0	EC002061
ETIM 5.0	EC002061

UNSPSC

UNSPSC 6.01	31251501
UNSPSC 7.0901	31251501
UNSPSC 11	31251501
UNSPSC 12.01	31251501
UNSPSC 13.2	39121413

approvals

UL Recognized / GOST / GOST /

Approval details

UL Recognized

Nominal voltage UN	250 V
Nominal current IN	4 A
mm²/AWG/kcmil	26-20

Bus system flush-type socket - SACCBP-FSB-2CON-PG9/5,0-910SCO - 1437478

approvals

GOST

Drawings

Dimensioned drawing

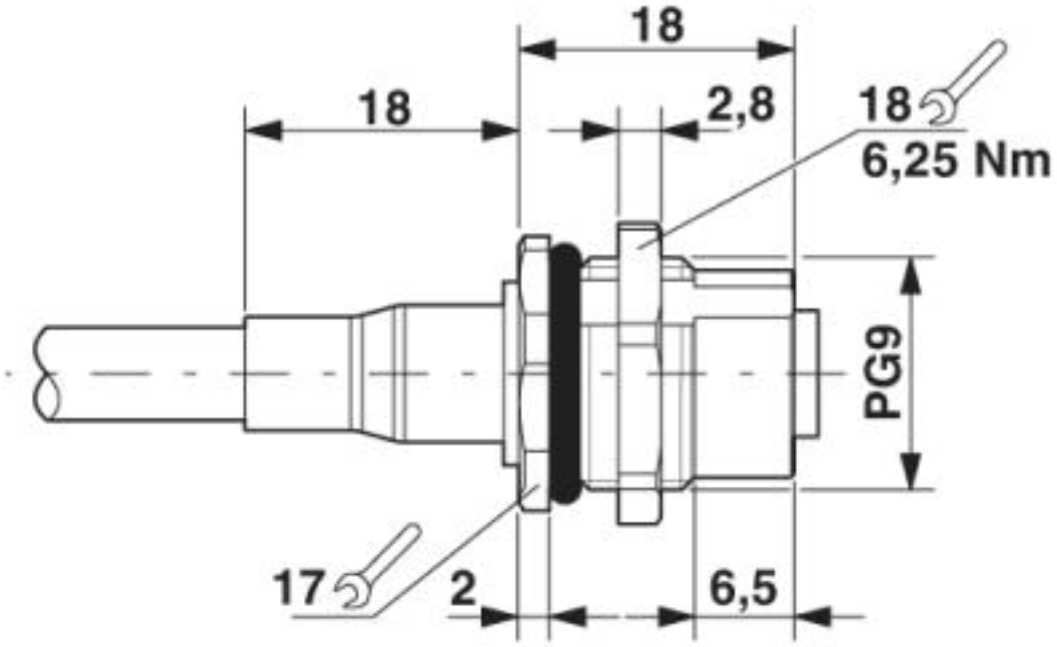

M12 panel feed-through

Bus system flush-type socket - SACCBP-FSB-2CON-PG9/5,0-910SCO - 1437478

Dimensioned drawing

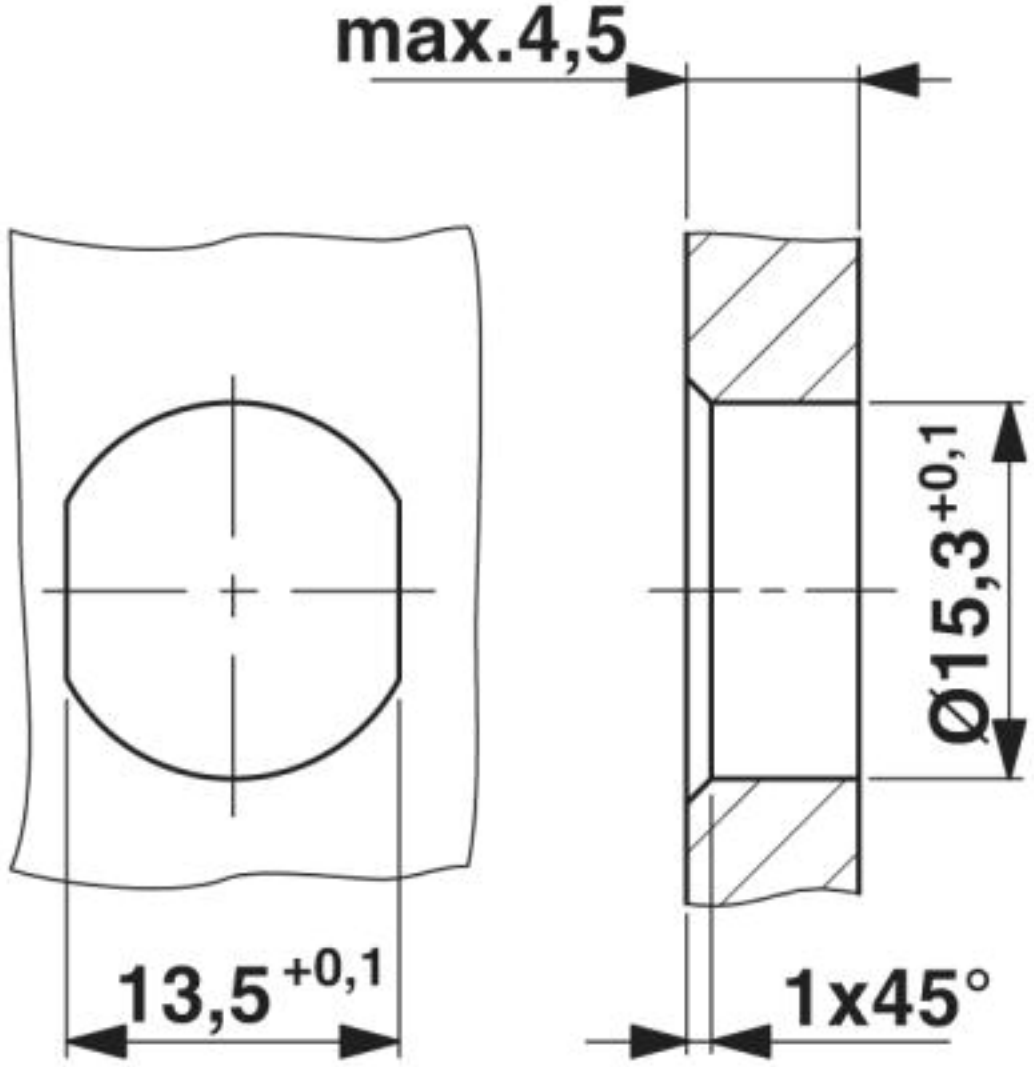

Housing cutout for Pg9 fastening thread, mounting panel with feed-through hole (alternatively with surface as protection against rotation)

Bus system flush-type socket - SACCBP-FSB-2CON-PG9/5,0-910SCO - 1437478

Circuit diagram

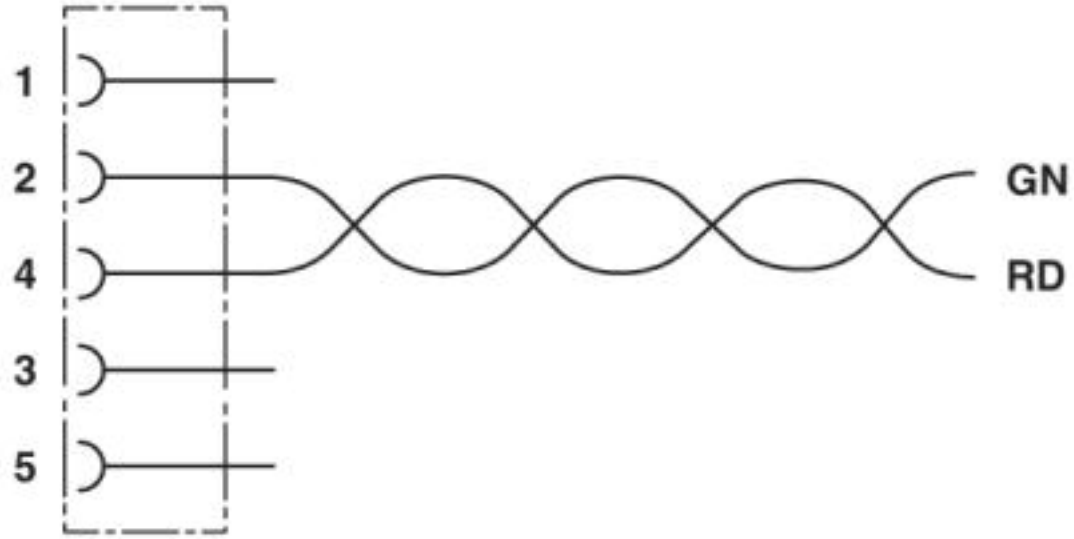

Contact assignment of the M12 socket

Bus system flush-type socket - SACCBP-FSB-2CON-PG9/5,0-910SCO - 1437478

Schematic diagram

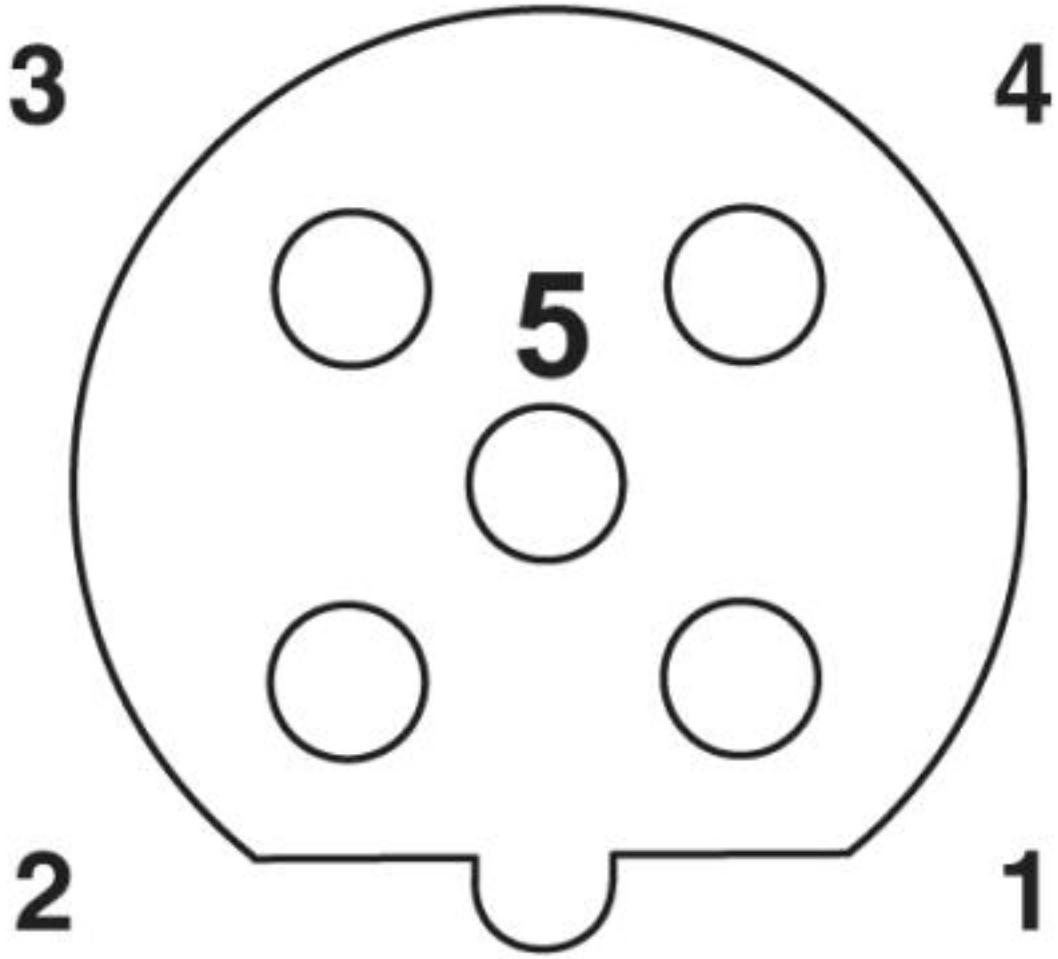

Pin assignment M12 socket, 5-pos., B-coded, female side

Bus system flush-type socket - SACCBP-FSB-2CON-PG9/5,0-910SCO - 1437478

Cable cross section

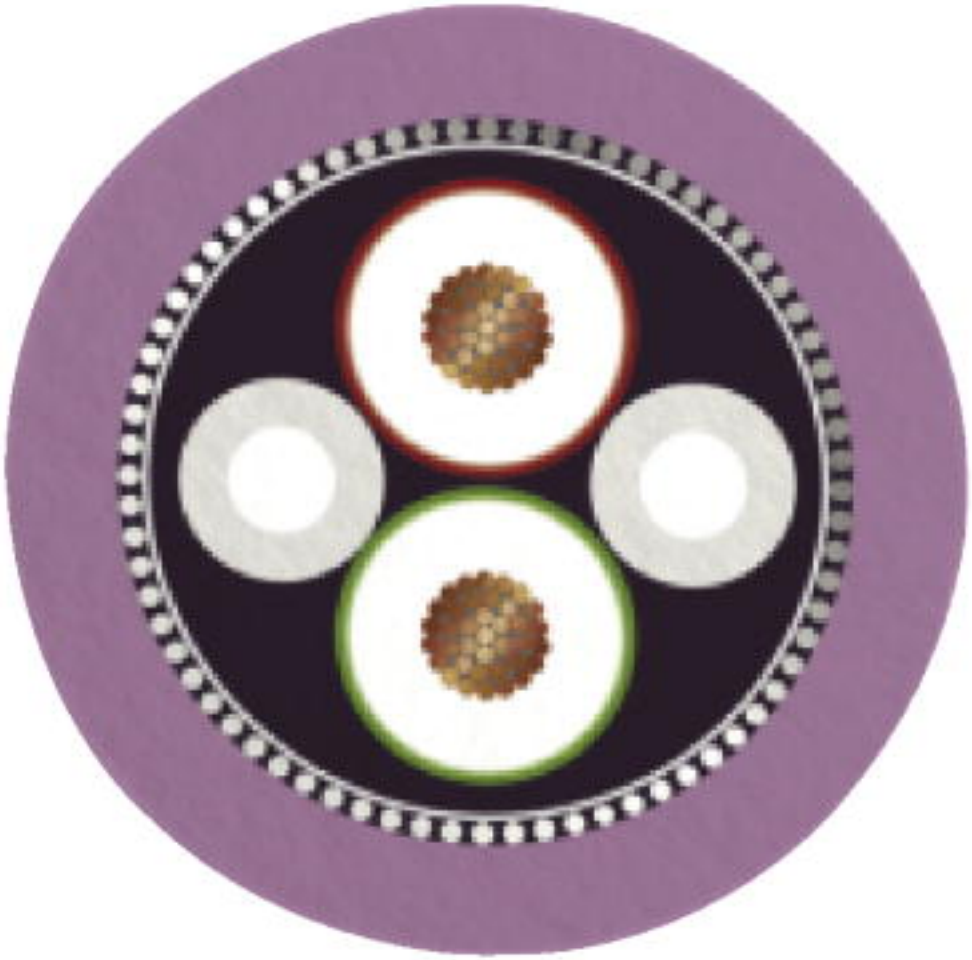

PROFIBUS [910]

© Phoenix Contact 2013 - all rights reserved
http://www.phoenixcontact.com