Panel feed-through - SACC-DSI-MS-5CON-M12-SCO SH - 1552968

Please be informed that the data shown in this PDF Document is generated from our Online Catalog. Please find the complete data in the user's documentation. Our General Terms of Use for Downloads are valid (http://download.phoenixcontact.com)



Sensor/actuator flush-type plug, 5-pos., M12-SPEEDCON, shielded, A-coded, rear/screw mounting with M12 thread, with straight solder connection

Key commercial data

package_quantity	20
GTIN	4046356161992

Technical data

Ambient conditions

Ambient temperature (operation)	-25 °C ... 85 °C (Plug / socket)
Degree of protection	IP67

General

Rated current at 40°C	4 A
Rated voltage	60 V
Number of positions	5
Contact resistance	≤ 3 mΩ
Insulation resistance	≥ 100 MΩ
Coding	A - standard
Standards/regulations	M12 connector IEC 61076-2-101
Status display	No
Surge voltage category	II
Pollution degree	3
Connection method	Solder pins
Insertion/withdrawal cycles	> 100
Mounting type	Rear mounting M12 x 1 With flat nut

Material

Inflammability class according to UL 94	V0
Contact material	CuZn
Contact surface material	Au
Contact carrier material	PA 66

Panel feed-through - SACC-DSI-MS-5CON-M12-SCO SH - 1552968

Technical data

Material

Material, knurls	Zinc die-cast, nickel-plated
Sealing material	NBR

classifications

eCl@ss

eCl@ss 4.0	27250313
eCl@ss 4.1	27250313
eCl@ss 5.0	27143423
eCl@ss 5.1	27143423
eCl@ss 6.0	27143423
eCl@ss 7.0	27449001
eCl@ss 8.0	27449001

ETIM

ETIM 3.0	EC002061
ETIM 4.0	EC002062
ETIM 5.0	EC002062

UNSPSC

UNSPSC 6.01	31261501
UNSPSC 7.0901	31261501
UNSPSC 11	31261501
UNSPSC 12.01	31261501
UNSPSC 13.2	31261501

approvals

UL Recognized / GOST / GOST /

Approval details

UL Recognized

Nominal voltage UN	60 V
Nominal current IN	4 A
mm²/AWG/kcmil	26-20

Panel feed-through - SACC-DSI-MS-5CON-M12-SCO SH - 1552968

approvals

GOST

Drawings

Drilling diagram

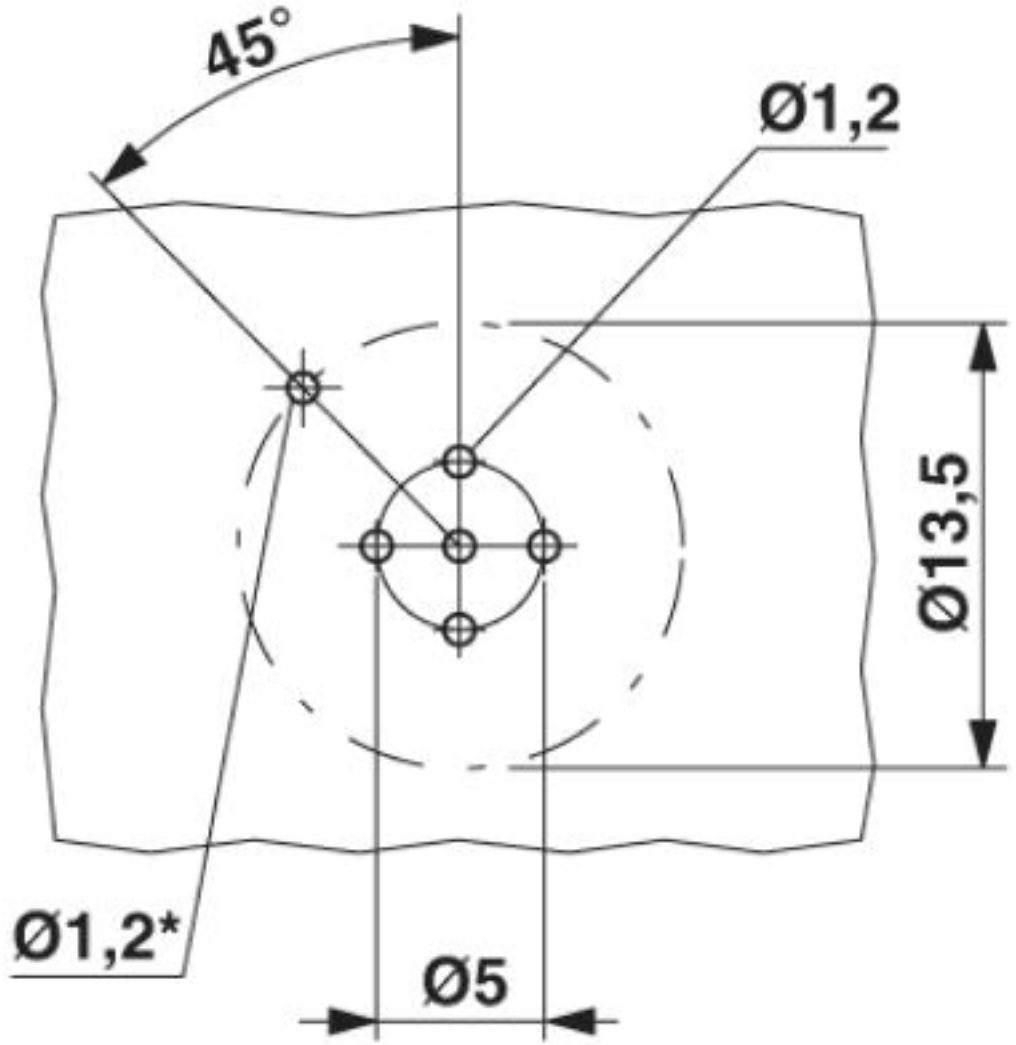

Panel feed-through - SACC-DSI-MS-5CON-M12-SCO SH - 1552968

Dimensioned drawing

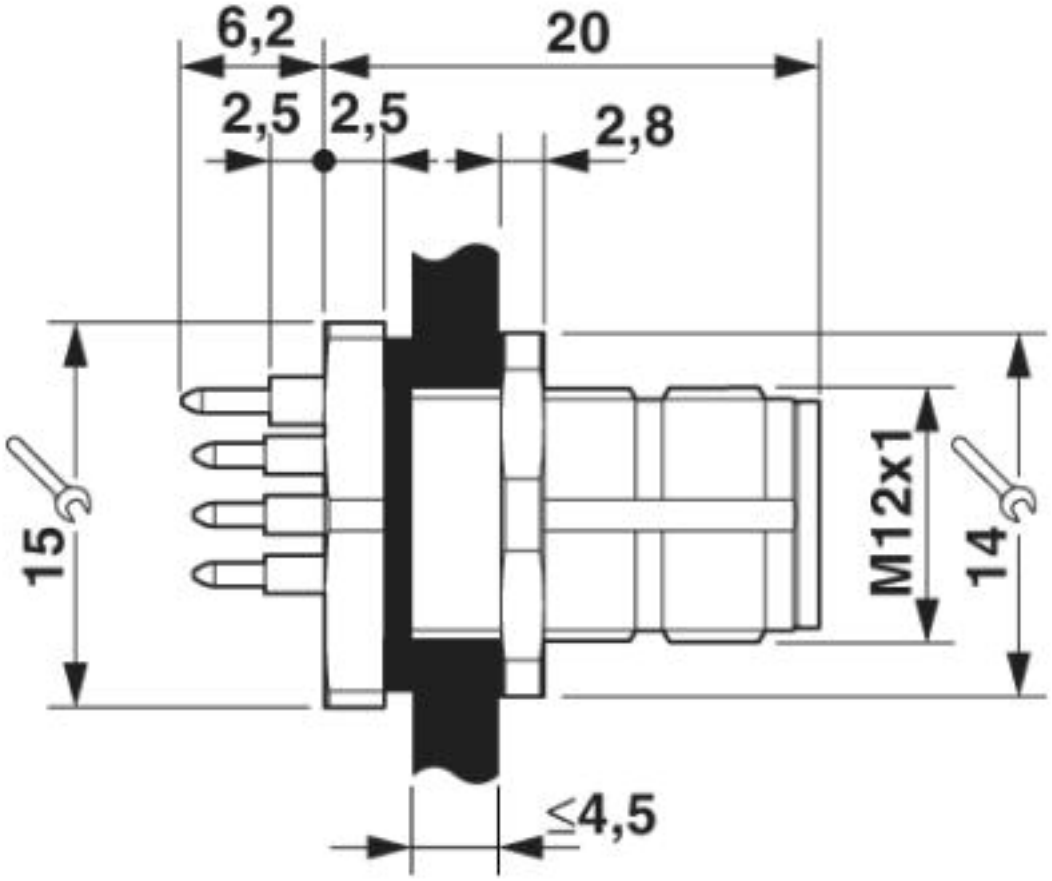

M12 flush-type connector

Panel feed-through - SACC-DSI-MS-5CON-M12-SCO SH - 1552968

Dimensioned drawing

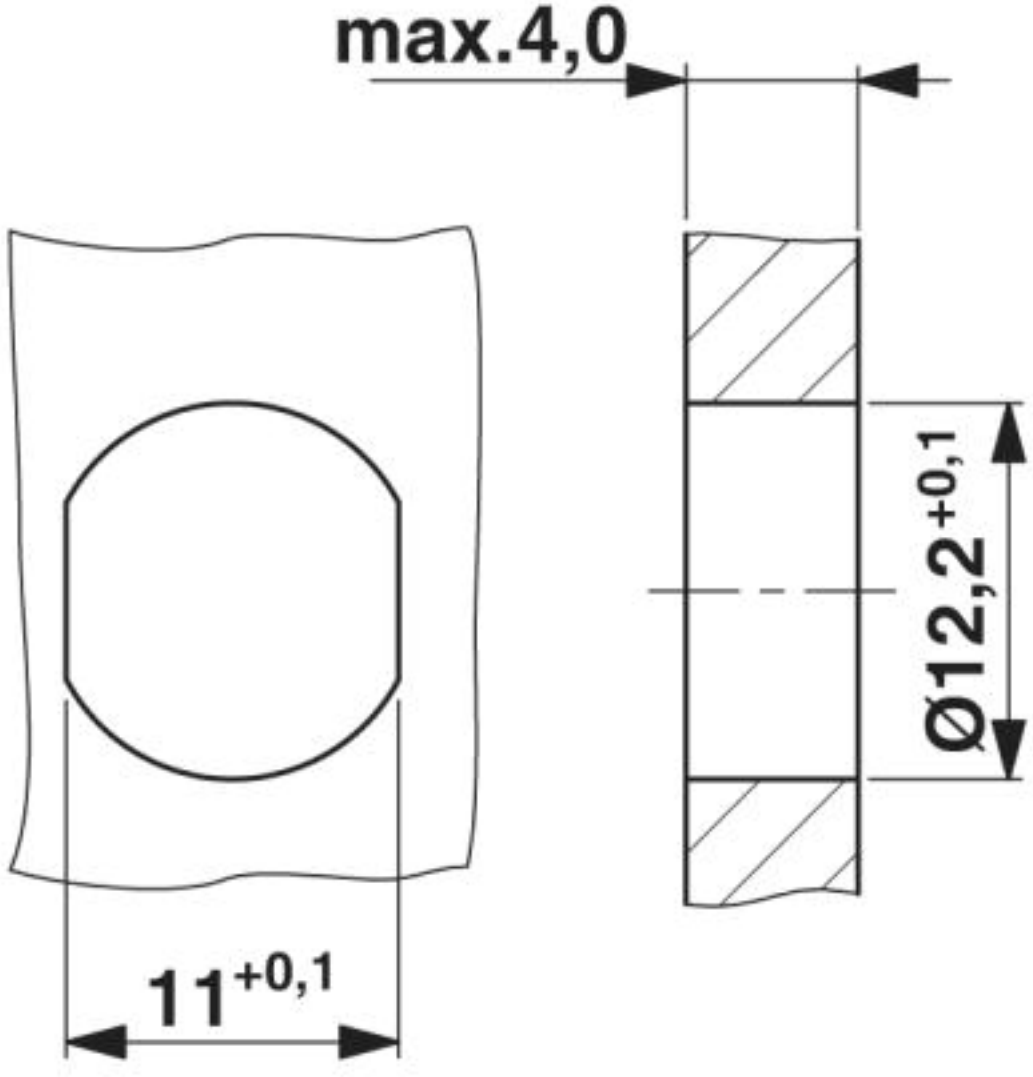

Panel cutout

Panel feed-through - SACC-DSI-MS-5CON-M12-SCO SH - 1552968

Dimensioned drawing

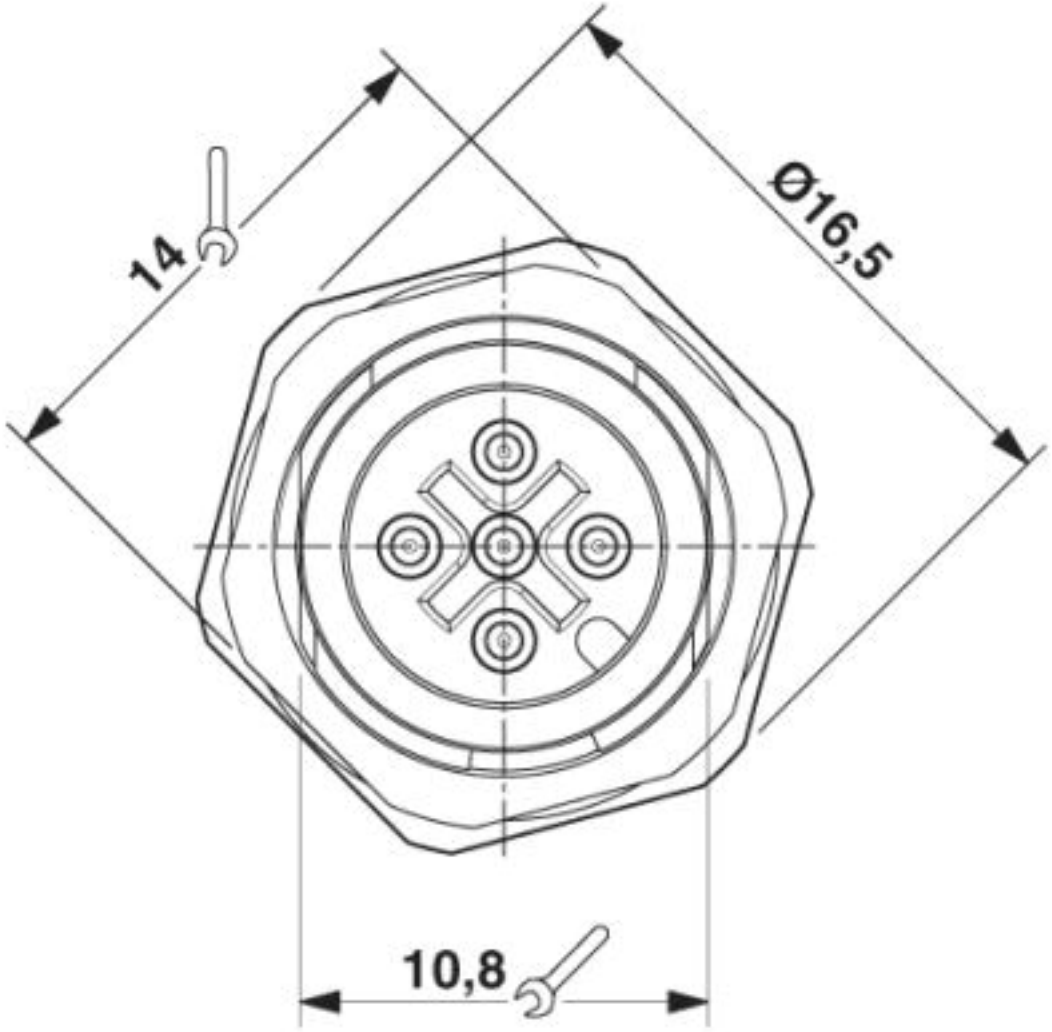

Front view of M12 flush-type connector

Panel feed-through - SACC-DSI-MS-5CON-M12-SCO SH - 1552968

Schematic diagram

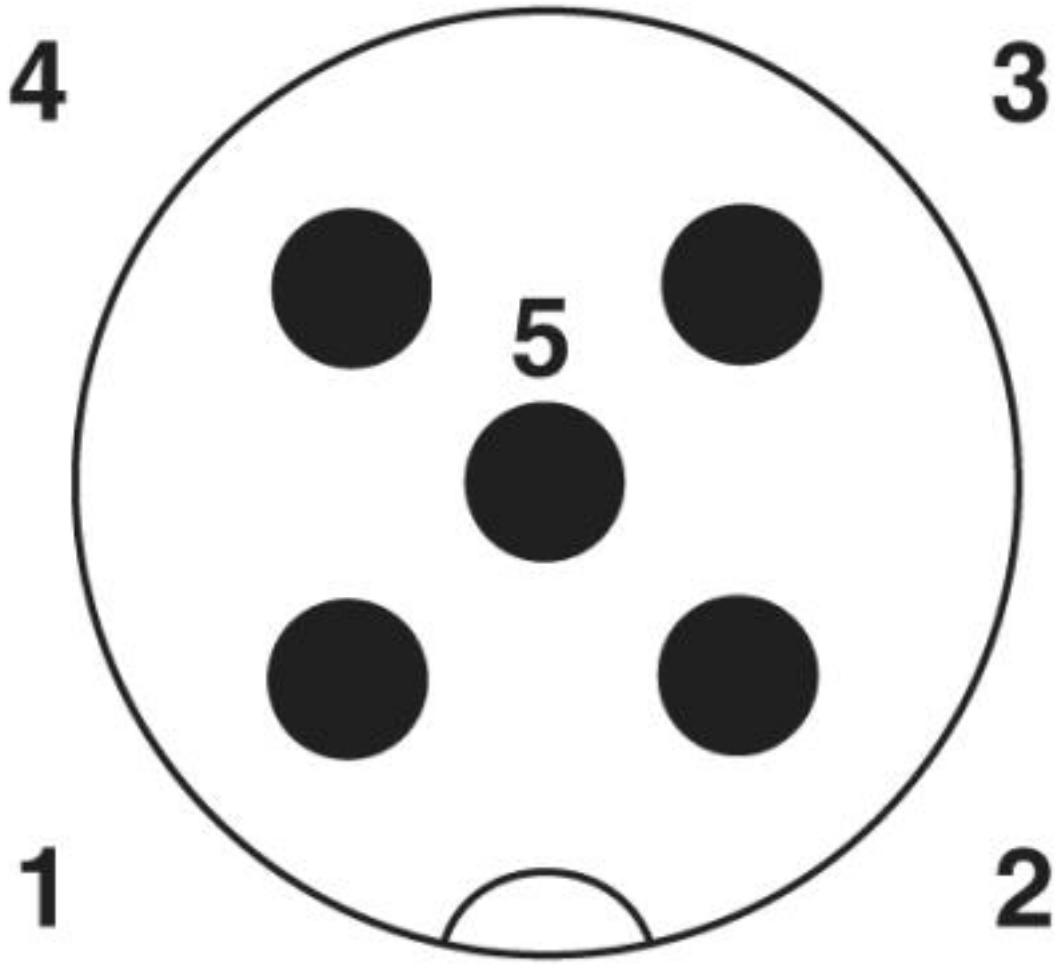

Pin assignment M12 male connector, 5-pos., A-coded, male side

© Phoenix Contact 2013 - all rights reserved
http://www.phoenixcontact.com