Sensor/Actuator cable - SAC-17P- 5,0-PVC/FR SCO - 1555402

Please be informed that the data shown in this PDF Document is generated from our Online Catalog. Please find the complete data in the user's documentation. Our General Terms of Use for Downloads are valid (http://download.phoenixcontact.com)



Sensor/Actuator cable, 17-position, PVC, Black RAL 9005, Free cable end, on Socket angled M12 SPEEDCON, A-coded, Cable length: 5 m

Product Features

- Easy and safe: 100% electrically tested plug-in components
- Save time, thanks to installation with SPEEDCON rapid interlock system
- Save space – with high-pos. connectors

Key commercial data

package_quantity	1
GTIN	4046356176682

Technical data

Dimensions

Length of cable	5 m
Cable cross section	6.4 mm
Stripping length of the free conductor end	35 mm

Ambient conditions

Ambient temperature (operation)	-25 °C ... 90 °C (Socket)
Degree of protection	IP65
Degree of protection	IP67
Degree of protection	IP68

General

Rated current at 40°C	1.5 A
Rated voltage	30 V
Number of positions	17
Contact resistance	≤ 5 mΩ
Insulation resistance	≥ 10 MΩ
Coding	A - standard
Standards/regulations	M12 connector IEC 61076-2-101
Status display	No
Protective circuit/component	Unwired

Sensor/Actuator cable - SAC-17P- 5,0-PVC/FR SCO - 1555402

Technical data

General

Surge voltage category	II
Pollution degree	3
Torque	0.4 Nm (M12 connector)

Material

Inflammability class according to UL 94	HB
Contact material	CuZn
Contact surface material	Ni/Au
Contact carrier material	TPU GF
Material of grip body	TPU, hardly inflammable, self-extinguishing
Material, knurls	Zinc die-cast, nickel-plated
Sealing material	NBR

Cable

Cable type	PVC black
Conductor cross section	0.14 mm²
AWG signal line	26
Conductor structure signal line	18x 0.10 mm
Core diameter including insulation	1 mm ±0.05 mm
Wire colors	Color-coded DIN 47100
Overall twist	Wires twisted in layers
External sheath, color	Black RAL 9005
External cable diameter	6.40 mm
Smallest bending radius, movable installation	96 mm
Outer sheath, material	PVC
Material conductor insulation	PVC
Conductor material	Bare Cu litz wires
Ambient temperature (operation)	-5 °C ... 80 °C (cable, flexible installation)
Ambient temperature (operation)	-25 °C ... 80 °C (cable, fixed installation)

classifications

eCl@ss

eCl@ss 4.0	27060306
eCl@ss 4.1	27060306
eCl@ss 5.0	27061801
eCl@ss 5.1	27061801
eCl@ss 6.0	27061801
eCl@ss 7.0	27061801
eCl@ss 8.0	27061801

ETIM

ETIM 3.0	EC001855

Sensor/Actuator cable - SAC-17P- 5,0-PVC/FR SCO - 1555402

classifications

ETIM

ETIM 4.0	EC001855
ETIM 5.0	EC001855

UNSPSC

UNSPSC 6.01	31251501
UNSPSC 7.0901	31251501
UNSPSC 11	31251501
UNSPSC 12.01	31251501
UNSPSC 13.2	31251501

approvals

GOST /

Approval details

GOST

accessories

Conductor marking

PABA WH/15 - 1013151



PABA YE/15 - 1013698



Sensor/Actuator cable - SAC-17P- 5,0-PVC/FR SCO - 1555402

accessories

PABA RD/15 - 1013944



Marker carrier cable

PATG 2/15 - 1013038



PATG 3/15 - 1013041



PATG 4/15 - 1013054



Marker pen

B-STIFT - 1051993



Cutting tools

Sensor/Actuator cable - SAC-17P- 5,0-PVC/FR SCO - 1555402

accessories

CUTFOX-S VDE - 1212207



Stripping tool

WIREFOX SAC - 1212623



WIREFOX 10 - 1212150



Protective cap

PROT-M12 MS-PA-CHAIN - 1430899



Safety locking

SAC-M12-EXCLIP-F - 1558991



Sensor/Actuator cable - SAC-17P- 5,0-PVC/FR SCO - 1555402

accessories

Torque tool

TSD 04 SAC - 1208429



TSD-M 1,2NM - 1212224



Screwdriver tools

TSD-M SAC-BIT ADAPTER - 1212600



SAC BIT M12-D15 - 1208432



accessories

WIREFOX SAC-1 - 1212757

Sensor/Actuator cable - SAC-17P- 5,0-PVC/FR SCO - 1555402

Drawings

Dimensioned drawing

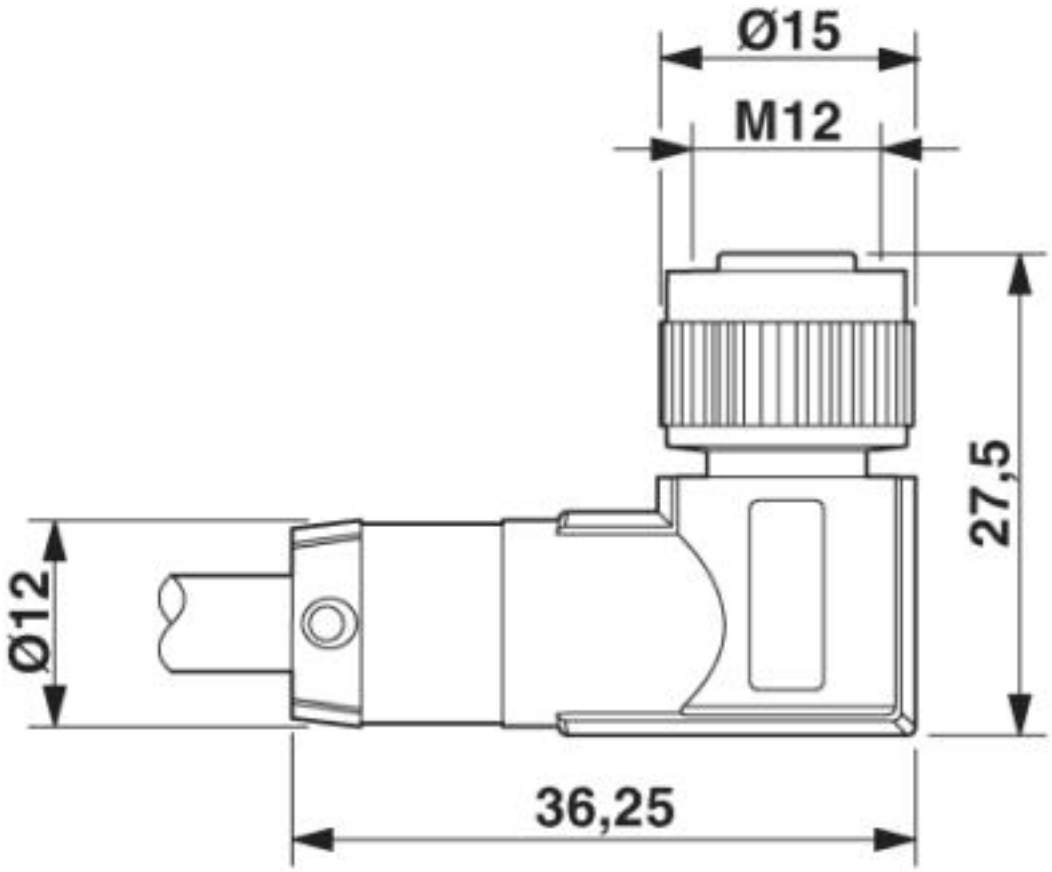

M12-SPEEDCON socket, angled

Sensor/Actuator cable - SAC-17P- 5,0-PVC/FR SCO - 1555402

Circuit diagram

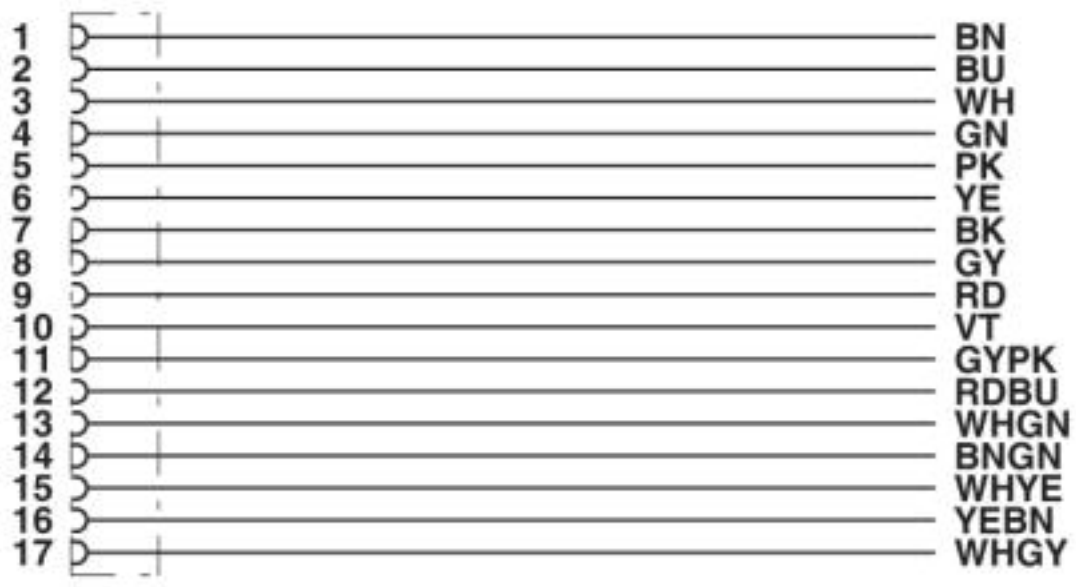

Contact assignment of the M12 socket

Sensor/Actuator cable - SAC-17P- 5,0-PVC/FR SCO - 1555402

Schematic diagram

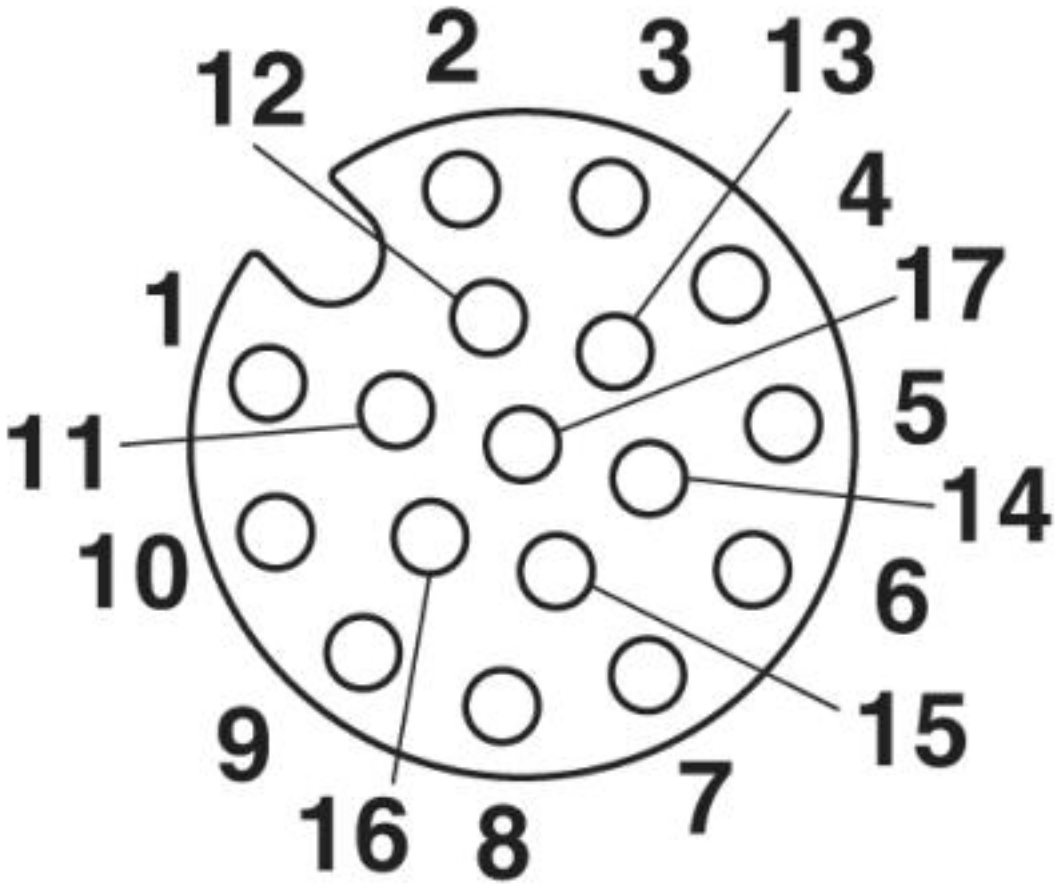

Pin assignment M12, 17-pos., socket side view

Sensor/Actuator cable - SAC-17P- 5,0-PVC/FR SCO - 1555402

Cable cross section



PVC black [PVC]

© Phoenix Contact 2013 - all rights reserved
http://www.phoenixcontact.com