Printed-circuit board connector - FK-MCP 1,5/20-STF-3,5 - 1940279

Please be informed that the data shown in this PDF Document is generated from our Online Catalog. Please find the complete data in the user's documentation. Our General Terms of Use for Downloads are valid (http://download.phoenixcontact.com)



The figure shows a 10-position version of the product

Plug component, Nominal current: 8 A, Rated voltage (III/2): 160 V, Number of positions: 20, Pitch: 3.5 mm, Connection method: Spring-cage conn., Color: green, Contact surface: Tin

Key commercial data

package_quantity	50
GTIN	4017918877491

Technical data

Dimensions

Pitch	3.5 mm
Dimension a	66.5 mm

General

Range of articles	FK-MCP 1,5/..-STF
Insulating material group	I
Rated surge voltage (III/3)	2.5 kV
Rated surge voltage (III/2)	2.5 kV
Rated surge voltage (II/2)	2.5 kV
Rated voltage (III/3)	160 V
Rated voltage (III/2)	160 V
Rated voltage (II/2)	320 V
Connection in acc. with standard	EN-VDE
Nominal current I_N	8 A
Nominal cross section	1.5 mm²
Maximum load current	8 A (with 1.5 mm² conductor cross section)
Insulating material	PA
Inflammability class according to UL 94	V0
Internal cylindrical gage	A1
Stripping length	9 mm
Number of positions	20

Connection data

Conductor cross section solid min.	0.14 mm²

Printed-circuit board connector - FK-MCP 1,5/20-STF-3,5 - 1940279

Technical data

Connection data

Conductor cross section solid max.	1.5 mm²
Conductor cross section stranded min.	0.14 mm²
Conductor cross section stranded max.	1.5 mm²
Conductor cross section stranded, with ferrule without plastic sleeve min.	0.25 mm²
Conductor cross section stranded, with ferrule without plastic sleeve max.	1.5 mm²
Conductor cross section stranded, with ferrule with plastic sleeve min.	0.25 mm²
Conductor cross section stranded, with ferrule with plastic sleeve max.	0.5 mm²
Conductor cross section AWG/kcmil min.	26
Conductor cross section AWG/kcmil max	16
Minimum AWG according to UL/CUL	28
Maximum AWG according to UL/CUL	16

classifications

eCl@ss

eCl@ss 4.0	272607xx
eCl@ss 4.1	27260701
eCl@ss 5.0	27260701
eCl@ss 5.1	27260701
eCl@ss 6.0	27260704
eCl@ss 7.0	27440402
eCl@ss 8.0	27440402

ETIM

ETIM 3.0	EC001121
ETIM 4.0	EC002638
ETIM 5.0	EC002638

UNSPSC

UNSPSC 6.01	30211810
UNSPSC 7.0901	39121409
UNSPSC 11	39121409
UNSPSC 12.01	39121409
UNSPSC 13.2	39121409

approvals

UL Recognized / VDE Gutachten mit Fertigungsüberwachung / cUL Recognized / GOST / IECEE CB Scheme / GOST / CCA / cULus Recognized /

Printed-circuit board connector - FK-MCP 1,5/20-STF-3,5 - 1940279

approvals

Approval details

UL Recognized

Usegroups	B
Nominal voltage UN	300 V
Nominal current IN	8 A
mm²/AWG/kcmil	28-16

VDE Gutachten mit Fertigungsüberwachung

Nominal voltage UN	160 V
Nominal current IN	8 A
mm²/AWG/kcmil	0.2-1.5

cUL Recognized

Usegroups	B
Nominal voltage UN	300 V
Nominal current IN	8 A
mm²/AWG/kcmil	28-16

GOST

IECEE CB Scheme

Nominal voltage UN	160 V
Nominal current IN	8 A
mm²/AWG/kcmil	0.2-1.5

CCA

Printed-circuit board connector - FK-MCP 1,5/20-STF-3,5 - 1940279

approvals

Nominal voltage UN	160 V
Nominal current IN	8 A
mm²/AWG/kcmil	0.2-1.5

cULus Recognized

Drawings

Dimensioned drawing

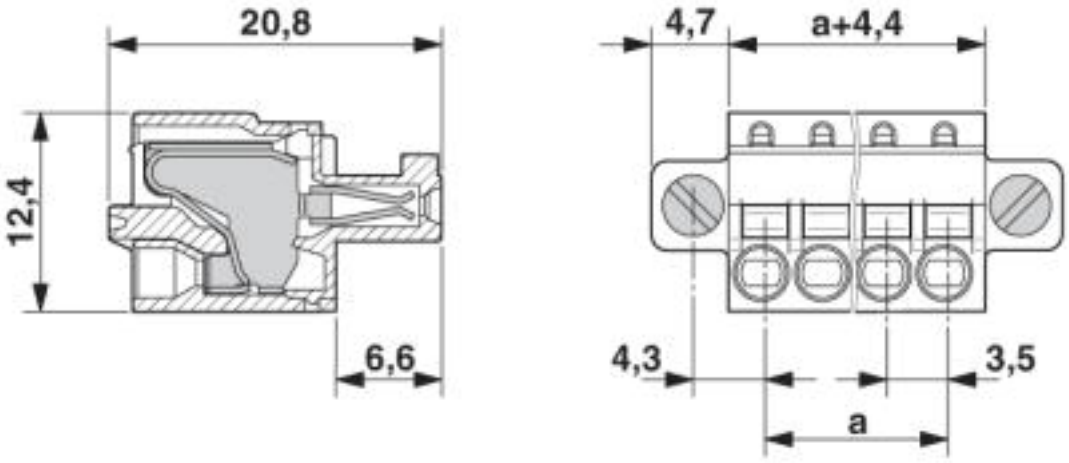

© Phoenix Contact 2013 - all rights reserved
http://www.phoenixcontact.com