Bus system flush-type socket - SACCBP-FSD-4CON-PG9/2,0-931SCO - 1437708

Please be informed that the data shown in this PDF Document is generated from our Online Catalog. Please find the complete data in the user's documentation. Our General Terms of Use for Downloads are valid (http://download.phoenixcontact.com)



Bus system flush-type socket, ETHERNET, 4-pos., M12, shielded, D-coded, SPEEDCON, rear/screw mounting with Pg9 thread, can be positioned, with 2.0 m bus cable, 2 x 2 x 0.2 mm²

Ethernet SPEEDCON LOCKING

Key commercial data

package_quantity	1
GTIN	4046356458443

Technical data

Dimensions

Length of cable	2 m

Ambient conditions

Ambient temperature (operation)	-25 °C ... 90 °C (Plug / socket)
Degree of protection	IP67

General

Rated current at 40°C	4 A
Rated voltage	60 V
Number of positions	4
Coding	D - data
Surge voltage category	II
Pollution degree	3

Material

Inflammability class according to UL 94	V0
Contact material	CuZn
Contact surface material	Ni/Au
Contact carrier material	PA 66
Material, knurls	Nickel-plated brass
Sealing material	NBR

Cable

Cable type	PUR ETHERNET 2x2 FLEX

Bus system flush-type socket - SACCBP-FSD-4CON-PG9/2,0-931SCO - 1437708

Technical data

Cable

Cable type (abbreviation)	93E
UL AWM style	20963 (80°C/30 V)
Cable structure	2x2xAWG26/7; SF/UTP
Conductor cross section	2x 2x 0.14 mm²
AWG signal line	26
Conductor structure signal line	7x 0.16 mm
Core diameter including insulation	0.98 mm
Wire colors	white/orange-orange, white/green-green
Twisted pairs	2 cores to the pair
Overall twist	Two pairs with two fillers to the core
Shielding	Aluminum-coated foil, tinned copper braided shield
Optical shield covering	70 %
External sheath, color	water blue RAL 5021
External cable diameter D	6.4 mm ± 0.2 mm
Minimum bending radius, fixed installation	4 x D
Minimum bending radius, flexible installation	8 x D
Cable weight	42 kg/km
Outer sheath, material	PUR
Material conductor insulation	Foamed PE
Conductor material	Bare Cu litz wires
Insulation resistance	≥ 500 MΩ*km (at 20 °C)
Conductor resistance	≤ 290 Ω/km (at 20 °C)
Transmission characteristics (category)	CAT5 (IEC 11801:2002), CAT5e (TIA 568B:2001)
Working capacitance	45 nF (At 1 kHz)
Wave impedance	100 Ω ± 5 Ω (At 100 MHz)
Signal runtime	5.3 ns/m
Nominal voltage, cable	≤ 100 V
Nominal voltage, cable	300 V (Outer cable sheath)
Test voltage Core/Core	700 V (50 Hz, 1 min.)
Test voltage Core/Shield	700 V (50 Hz, 1 min.)
Flame resistance	IEC 60332-1-2
Halogen-free	According to IEC 60754-1
Resistance to oil	in accordance with DIN EN 60811-2-1
Ambient temperature (operation)	-40 °C ... 80 °C (cable, fixed installation)
Ambient temperature (operation)	-20 °C ... 80 °C (cable, flexible installation)

classifications

eCl@ss

eCl@ss 4.0	27250313

Bus system flush-type socket - SACCBP-FSD-4CON-PG9/2,0-931SCO - 1437708

classifications

eCl@ss

eCl@ss 4.1	27250313
eCl@ss 5.0	27143423
eCl@ss 5.1	27143423
eCl@ss 6.0	27143423
eCl@ss 7.0	27449001
eCl@ss 8.0	27449001

ETIM

ETIM 3.0	EC002061
ETIM 4.0	EC002061
ETIM 5.0	EC002061

UNSPSC

UNSPSC 6.01	31251501
UNSPSC 7.0901	31251501
UNSPSC 11	31251501
UNSPSC 12.01	31251501
UNSPSC 13.2	39121413

approvals

UL Recognized / GOST /

Approval details

UL Recognized

Nominal voltage UN	250 V
Nominal current IN	4 A
mm²/AWG/kcmil	26-20

GOST

Drawings

Bus system flush-type socket - SACCBP-FSD-4CON-PG9/2,0-931SCO - 1437708

Dimensioned drawing

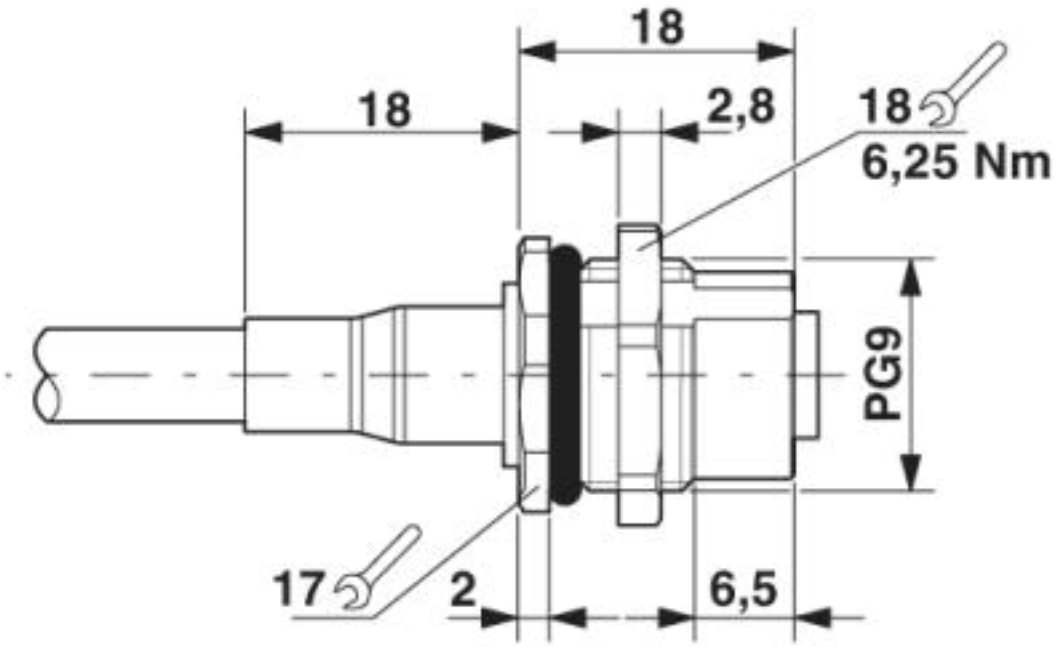

M12 panel feed-through

Bus system flush-type socket - SACCBP-FSD-4CON-PG9/2,0-931SCO - 1437708

Dimensioned drawing

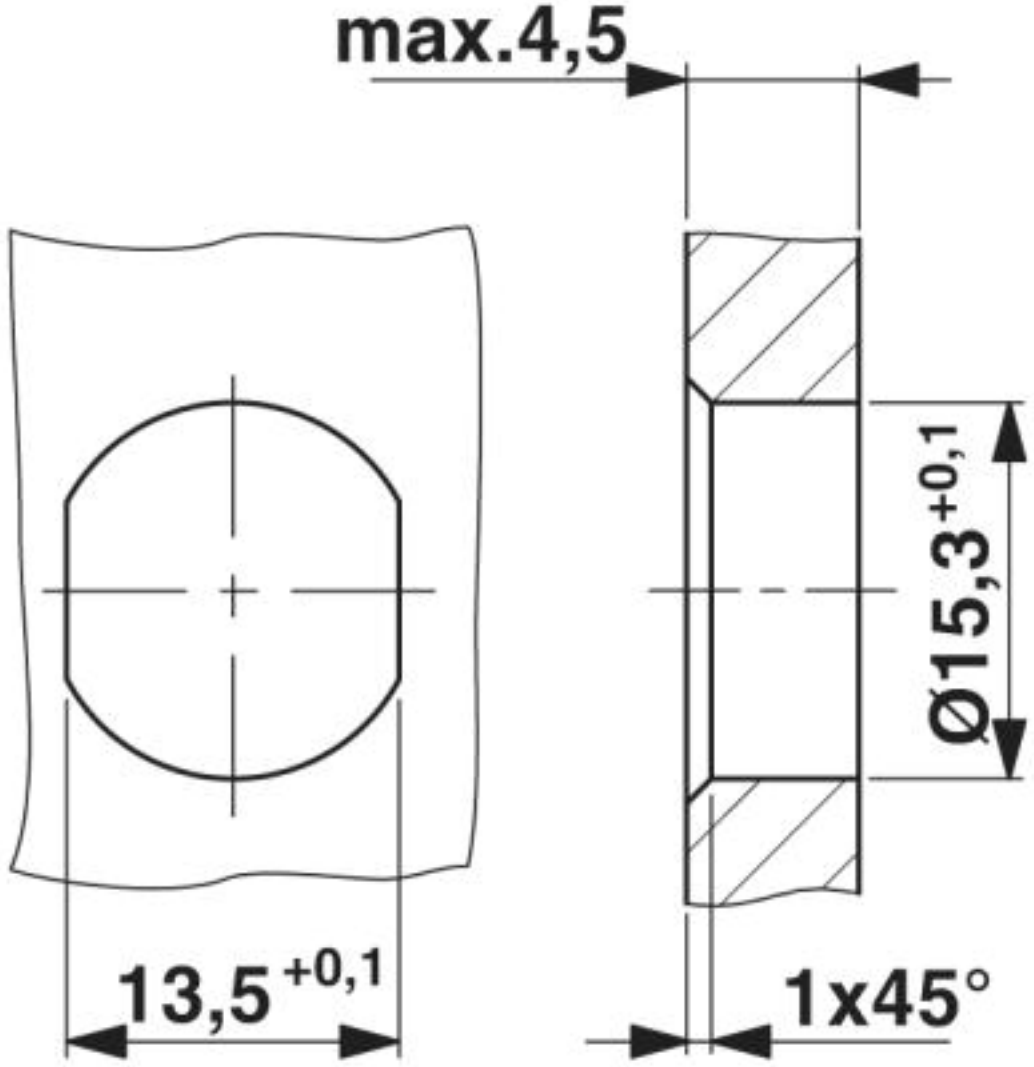

Housing cutout for Pg9 fastening thread, mounting panel with feed-through hole (alternatively with surface as protection against rotation)

Bus system flush-type socket - SACCBP-FSD-4CON-PG9/2,0-931SCO - 1437708

Circuit diagram

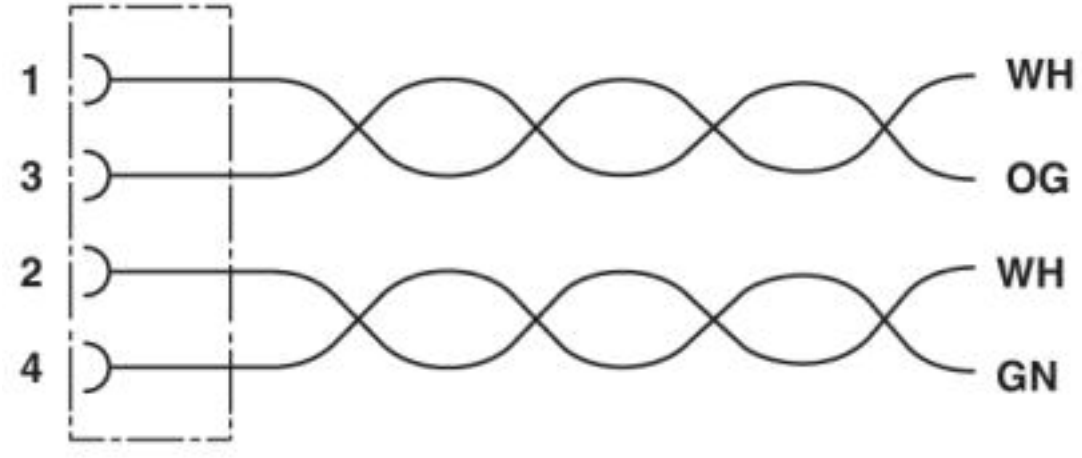

Contact assignment of the M12 socket

Bus system flush-type socket - SACCBP-FSD-4CON-PG9/2,0-931SCO - 1437708

Schematic diagram

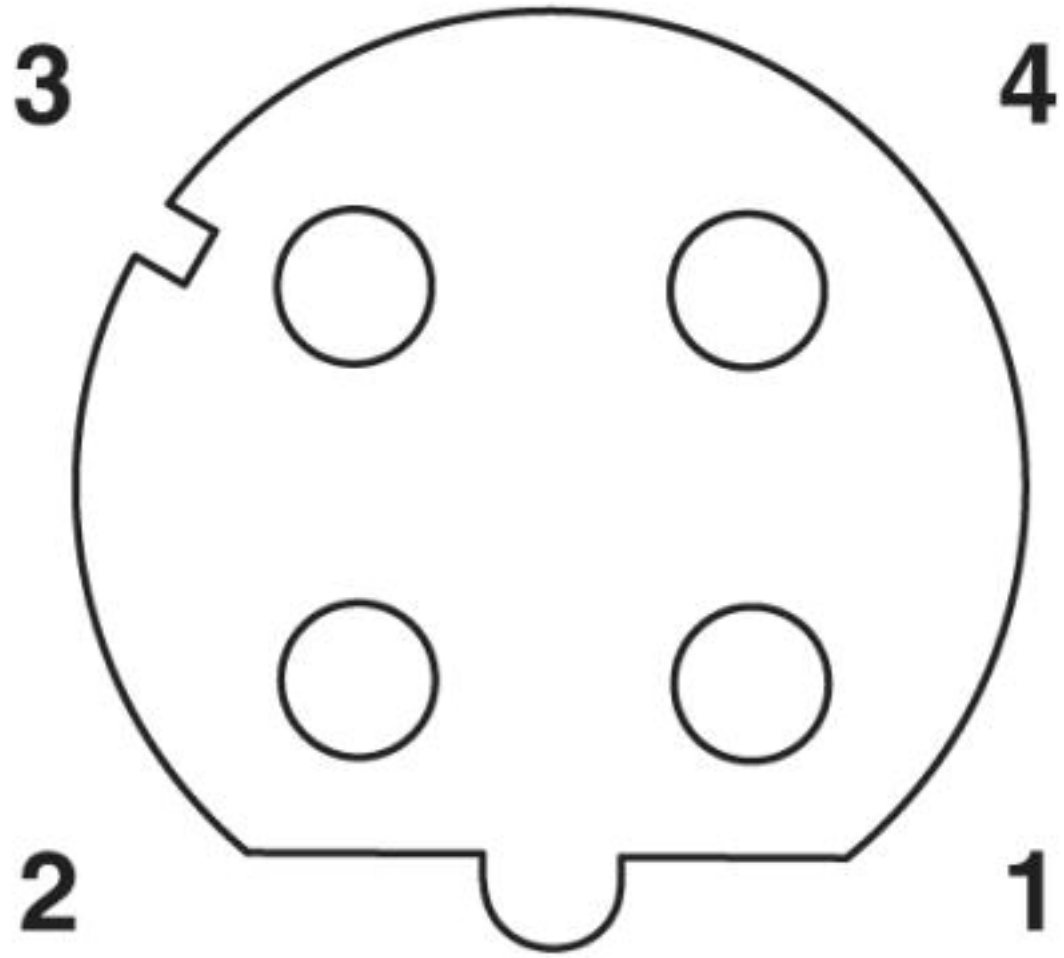

Pin assignment M12 socket, 4-pos., D-coded, female side

Bus system flush-type socket - SACCBP-FSD-4CON-PG9/2,0-931SCO - 1437708

Cable cross section

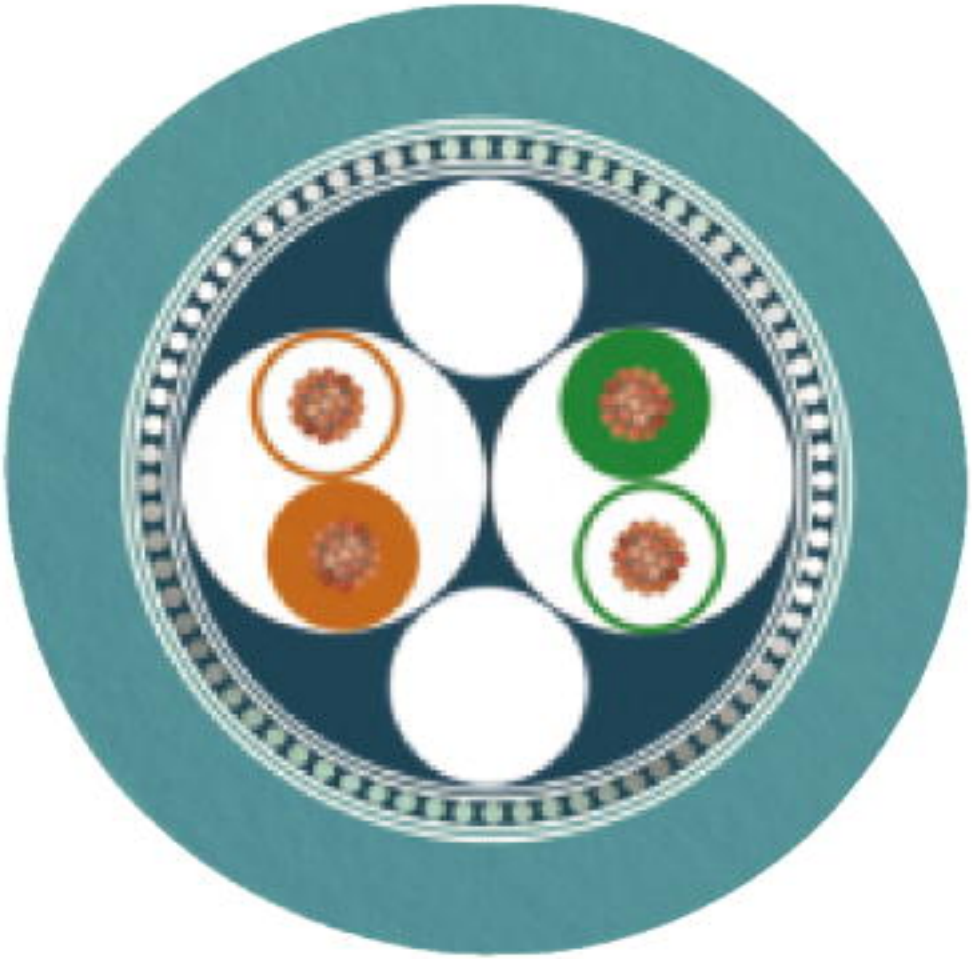

Ethernet [93E]

© Phoenix Contact 2013 - all rights reserved
http://www.phoenixcontact.com