Sensor/Actuator cable - SAC-4P- 3,0-PUR/M12FS-2L - 1694813

Please be informed that the data shown in this PDF Document is generated from our Online Catalog. Please find the complete data in the user's documentation. Our General Terms of Use for Downloads are valid (http://download.phoenixcontact.com)



Sensor/Actuator cable, 4-position, PUR halogen-free, Black-gray RAL 7021, Free cable end, on Socket straight M12, A-coded, with 2 LEDs, Cable length: 3 m

Product Features

- Easy and safe: 100% electrically tested plug-in components
- Our standard: robust halogen-free PUR cable
- Convenient: increased machine availability thanks to quick and easy diagnostics

Key commercial data

package_quantity	1
GTIN	4017918179816

Technical data

Dimensions

Length of cable	3 m
Stripping length of the free conductor end	50 mm

Ambient conditions

Ambient temperature (operation)	-25 °C ... 90 °C (Plug / socket)
Degree of protection	IP65
Degree of protection	IP67
Degree of protection	IP68

General

Rated current at 40°C	4 A
Rated voltage	24 V
Number of positions	4
Contact resistance	≤ 5 mΩ
Insulation resistance	≥ 10 MΩ
Coding	A - standard
Standards/regulations	M12 connector IEC 61076-2-101
Status display	2 LEDs
Protective circuit/component	Unwired
Surge voltage category	II
Pollution degree	3
Insertion/withdrawal cycles	≥ 100

Sensor/Actuator cable - SAC-4P- 3,0-PUR/M12FS-2L - 1694813

Technical data

General

Torque	0.4 Nm (M12 connector)

Material

Inflammability class according to UL 94	HB
Contact material	CuSn
Contact surface material	Ni/Au
Contact carrier material	TPU GF
Material of grip body	TPU, hardly inflammable, self-extinguishing
Material, knurls	Zinc die-cast, nickel-plated
Sealing material	NBR

Cable

Cable type	PUR halogen-free black
Cable type (abbreviation)	PUR
Cable abbreviation	Li9Y11Y-HF
UL AWM style	20549 / 10493 (80°C/300 V)
Conductor cross section	4x 0.34 mm²
AWG signal line	22
Conductor structure signal line	42x 0.10 mm
Core diameter including insulation	1.27 mm ±0.02 mm
Thickness, insulation	≥ 0.21 mm
Wire colors	brown, white, blue, black
Overall twist	4 wires, twisted
External sheath, color	Black-gray RAL 7021
Outer sheath thickness	approx. 0.8 mm
External cable diameter D	4.7 mm ±0.15 mm
Minimum bending radius, fixed installation	5 x D
Minimum bending radius, flexible installation	10 x D
Number of bending cycles	4000000
Minimum bending radius, drag chain applications	10 x D
Traversing path	10 m
Traversing rate	3 m/s
Acceleration	10 m/s²
Cable weight	30 kg/km
Outer sheath, material	PUR
Material conductor insulation	PP
Conductor material	Bare Cu litz wires
Insulation resistance	≥ 1 GΩ*km
Conductor resistance	≤ 58 Ω/km
Nominal voltage, cable	≤ 300 V
Test voltage, cable	≥ 3000 V
Special properties	Flexible cable conduit capable

Sensor/Actuator cable - SAC-4P- 3,0-PUR/M12FS-2L - 1694813

Technical data

Cable

Special properties	Silicone-free
Special properties	Free of substances which would hinder coating with paint or varnish
Special properties	Flexible
Flame resistance	in accordance with DIN UL-Style 20549
Flame resistance	in accordance with FT1 as per UL 758
Halogen-free	in accordance with DIN VDE 0472 part 815
Halogen-free	in accordance with DIN EN 50267-2-1
Resistance to oil	in accordance with DIN EN 60811-2-1
Other resistance	Highly resistant to acids, alkaline solutions and solvents
Other resistance	hydrolysis and microbe resistant
Other resistance	partly UV-resistant in accordance with DIN EN ISO 4892-2-A
Other resistance	Low adhesion
Other resistance	abrasion-resistant
Ambient temperature (operation)	-40 °C ... 80 °C (cable, fixed installation)
Ambient temperature (operation)	-25 °C ... 80 °C (cable, flexible installation)

classifications

eCl@ss

eCl@ss 4.0	27060306
eCl@ss 4.1	27060306
eCl@ss 5.0	27061801
eCl@ss 5.1	27061801
eCl@ss 6.0	27061801
eCl@ss 7.0	27061801
eCl@ss 8.0	27061801

ETIM

ETIM 2.0	EC000830
ETIM 3.0	EC001855
ETIM 4.0	EC001855
ETIM 5.0	EC001855

UNSPSC

UNSPSC 6.01	31251501
UNSPSC 7.0901	31251501
UNSPSC 11	31251501
UNSPSC 12.01	31251501
UNSPSC 13.2	31251501

Sensor/Actuator cable - SAC-4P- 3,0-PUR/M12FS-2L - 1694813

approvals

UL Listed / cUL Listed / GOST / cULus Listed /

Approval details

UL Listed

Nominal voltage UN	24 V
Nominal current IN	4 A
mm²/AWG/kcmil	

cUL Listed

Nominal voltage UN	24 V
Nominal current IN	4 A
mm²/AWG/kcmil	

GOST

cULus Listed

accessories

Conductor marking

PABA WH/15 - 1013151



Sensor/Actuator cable - SAC-4P- 3,0-PUR/M12FS-2L - 1694813

accessories

PABA YE/15 - 1013698



PABA RD/15 - 1013944



Marker carrier cable

PATG 2/15 - 1013038



PATG 3/15 - 1013041



PATG 4/15 - 1013054



Marker pen

Sensor/Actuator cable - SAC-4P- 3,0-PUR/M12FS-2L - 1694813

accessories

B-STIFT - 1051993



Cutting tools

CUTFOX-S VDE - 1212207



Stripping tool

WIREFOX SAC - 1212623



WIREFOX 10 - 1212150



Protective cap

PROT-M12 MS-PA-CHAIN - 1430899



Sensor/Actuator cable - SAC-4P- 3,0-PUR/M12FS-2L - 1694813

accessories

Safety locking

SAC-M12-EXCLIP-F - 1558991



Torque tool

TSD 04 SAC - 1208429



TSD-M 1,2NM - 1212224



Screwdriver tools

TSD-M SAC-BIT ADAPTER - 1212600



SAC BIT M12-D15 - 1208432



Sensor/Actuator cable - SAC-4P- 3,0-PUR/M12FS-2L - 1694813

accessories

WIREFOX SAC-1 - 1212757

Drawings

Dimensioned drawing

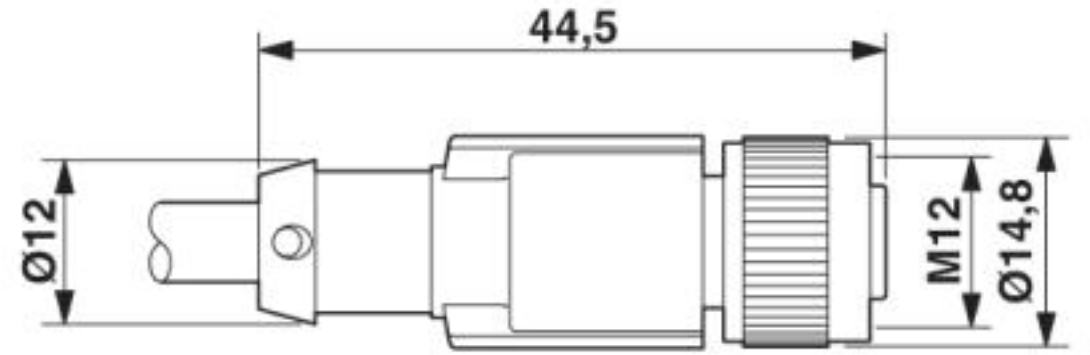

Socket M12 x 1, straight, with LED

Sensor/Actuator cable - SAC-4P- 3,0-PUR/M12FS-2L - 1694813

Circuit diagram

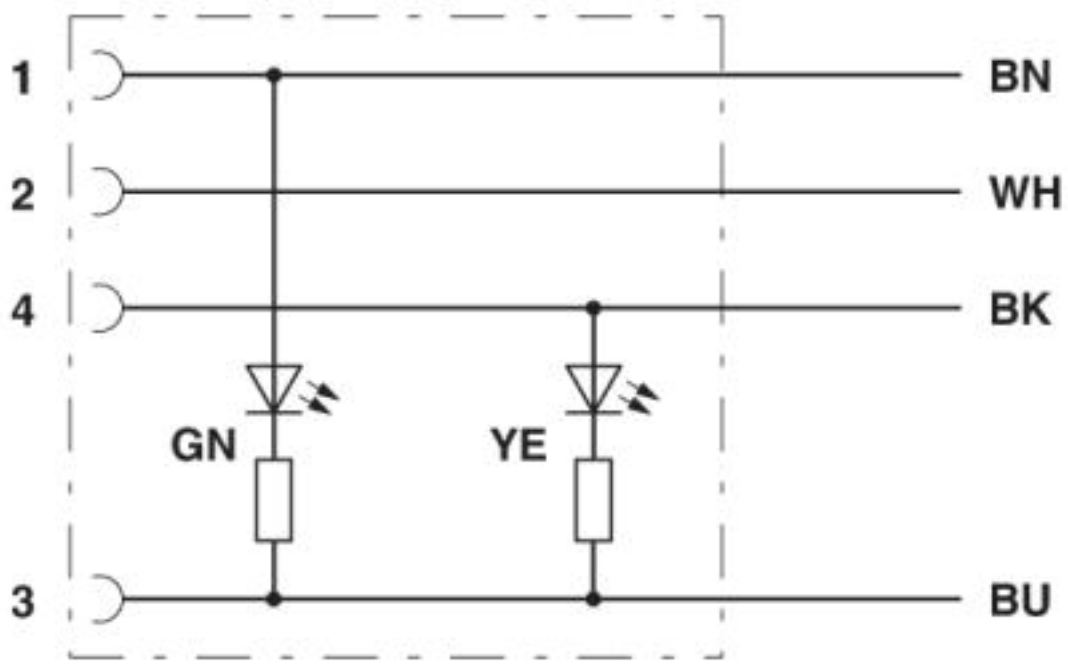

Contact assignment of M12 sockets with LED

Sensor/Actuator cable - SAC-4P- 3,0-PUR/M12FS-2L - 1694813

Schematic diagram

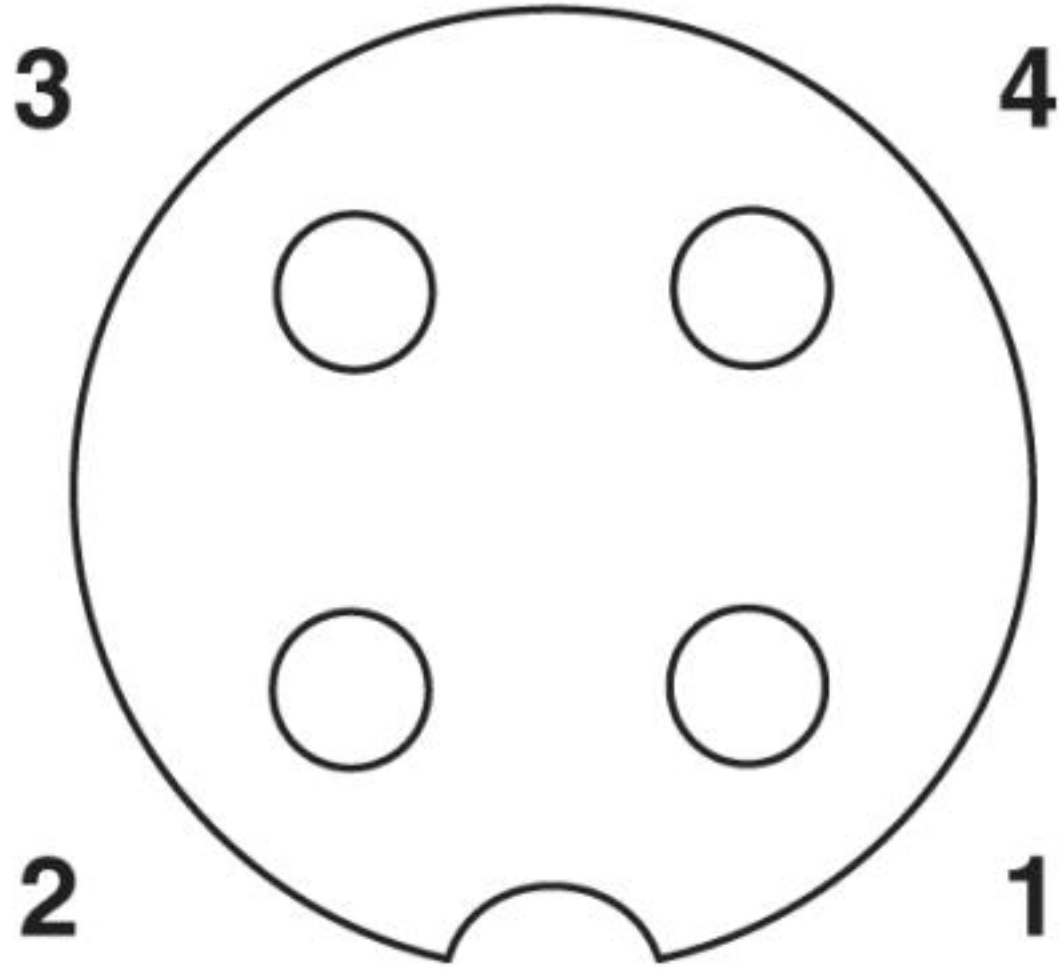

Pin assignment M12 socket, 4-pos., A-coded, view female side

Sensor/Actuator cable - SAC-4P- 3,0-PUR/M12FS-2L - 1694813

Cable cross section

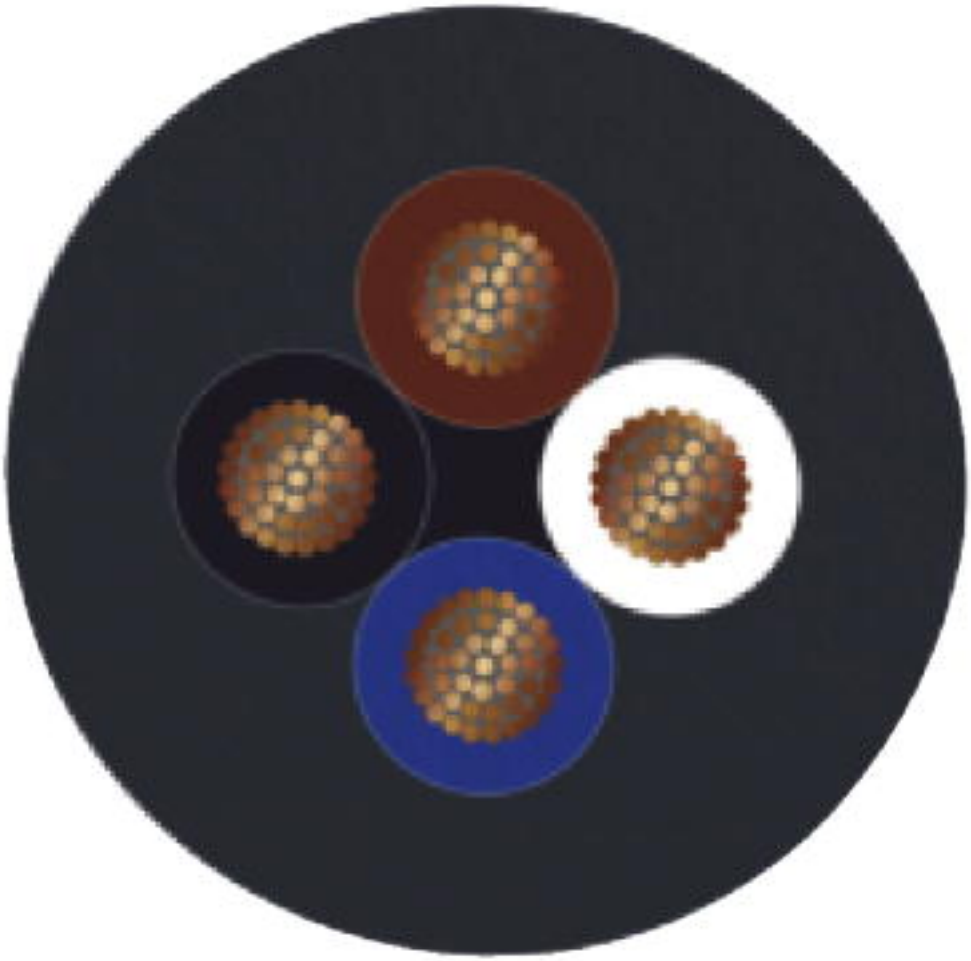

PUR halogen-free black [PUR]

© Phoenix Contact 2013 - all rights reserved
http://www.phoenixcontact.com