Flush-type connector - SACC-CI-M12FS-5CON TOR 32 - 1457649

Please be informed that the data shown in this PDF Document is generated from our Online Catalog. Please find the complete data in the user's documentation. Our General Terms of Use for Downloads are valid (http://download.phoenixcontact.com)



Sensor/actuator flush-type socket, 5-pos., A-coded, with straight THR solder connection, only contact insert

Key commercial data

package_quantity	100
GTIN	4046356617390

Technical data

Ambient conditions

Ambient temperature (operation)	-25 °C ... 85 °C (Plug / socket)
Degree of protection	IP67

General

Rated current at 40°C	4 A
Rated voltage	60 V
Number of positions	5
Contact resistance	≤ 3 mΩ
Insulation resistance	≥ 100 MΩ
Coding	A - standard
Standards/regulations	M12 connector IEC 61076-2-101
Status display	No
Surge voltage category	II
Pollution degree	3
Connection method	THR solder connection
Mounting type	PCB mounting

Material

Inflammability class according to UL 94	V0
Contact material	CuZn
Contact surface material	Ni/Au
Contact carrier material	PA 66
Sealing material	FKM / EPDM

Flush-type connector - SACC-CI-M12FS-5CON TOR 32 - 1457649

classifications

eCl@ss

eCl@ss 4.0	27060306
eCl@ss 4.1	27060306
eCl@ss 5.0	27061801
eCl@ss 5.1	27260701
eCl@ss 6.0	27279220
eCl@ss 7.0	27440103
eCl@ss 8.0	27440103

ETIM

ETIM 3.0	EC002061
ETIM 4.0	EC002061
ETIM 5.0	EC002061

UNSPSC

UNSPSC 6.01	31251501
UNSPSC 7.0901	31251501
UNSPSC 11	31251501
UNSPSC 12.01	31251501
UNSPSC 13.2	31251501

approvals

UL Recognized / GOST / GOST /

Approval details

UL Recognized

Nominal voltage UN	60 V
Nominal current IN	4 A
mm²/AWG/kcmil	26-20

GOST

Flush-type connector - SACC-CI-M12FS-5CON TOR 32 - 1457649

accessories

Panel mounting base

SACC-M12-SCO NUT - 1552243



SACC-M12-SCO NUT L 90 - 1432460



SACC-M12 NUT PRESS - 1437889



Drawings

Flush-type connector - SACC-CI-M12FS-5CON TOR 32 - 1457649

Drilling diagram

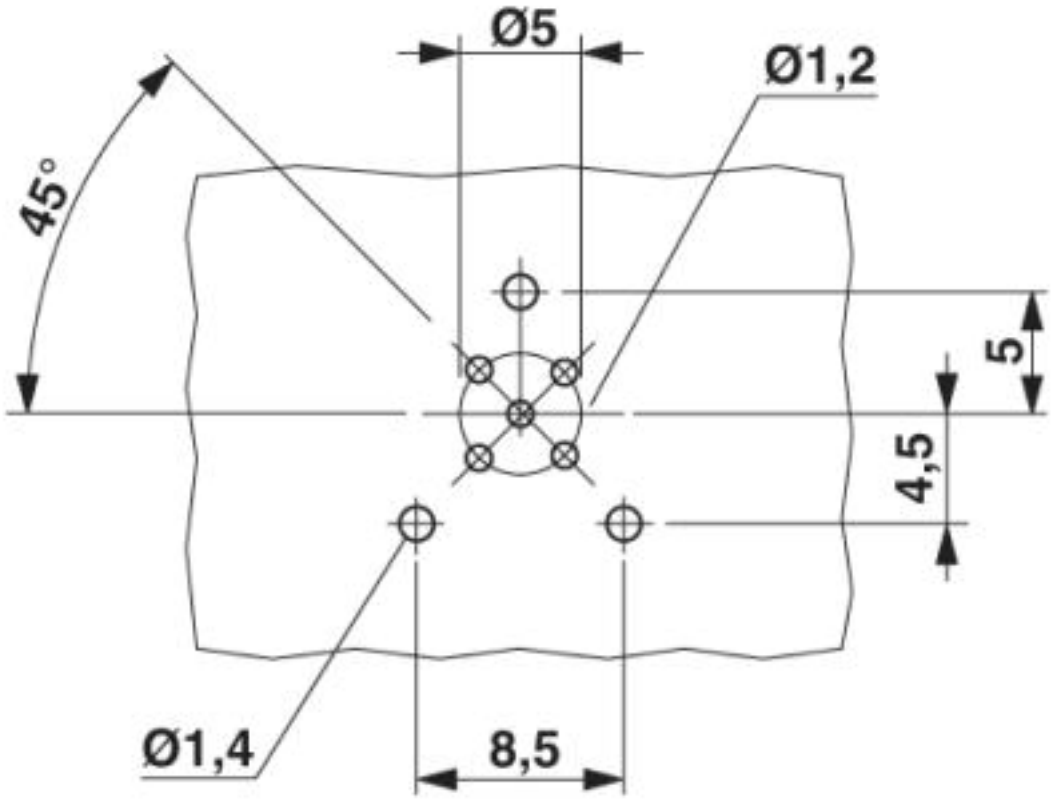

Drilling diagram

Dimensioned drawing

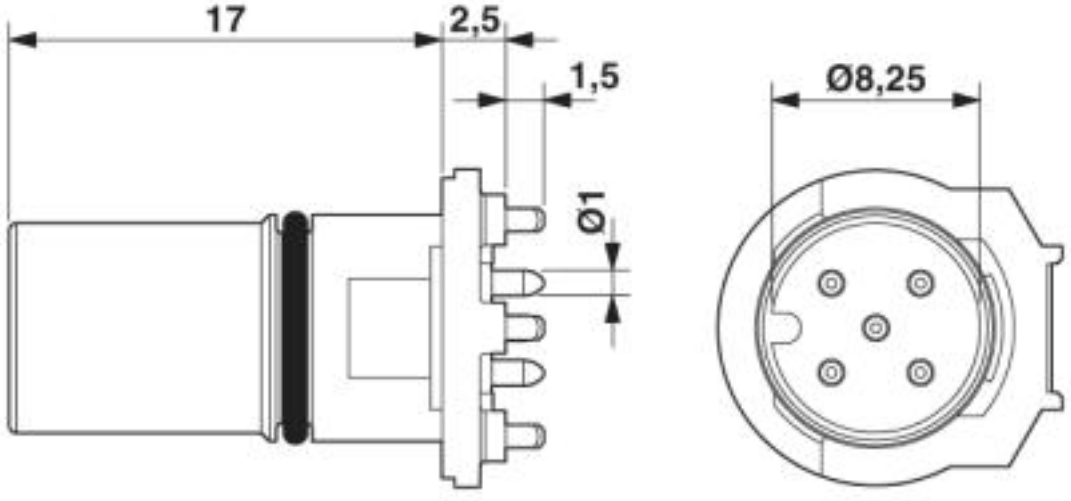

M12 female connector contact carrier

Flush-type connector - SACC-CI-M12FS-5CON TOR 32 - 1457649

Dimensioned drawing

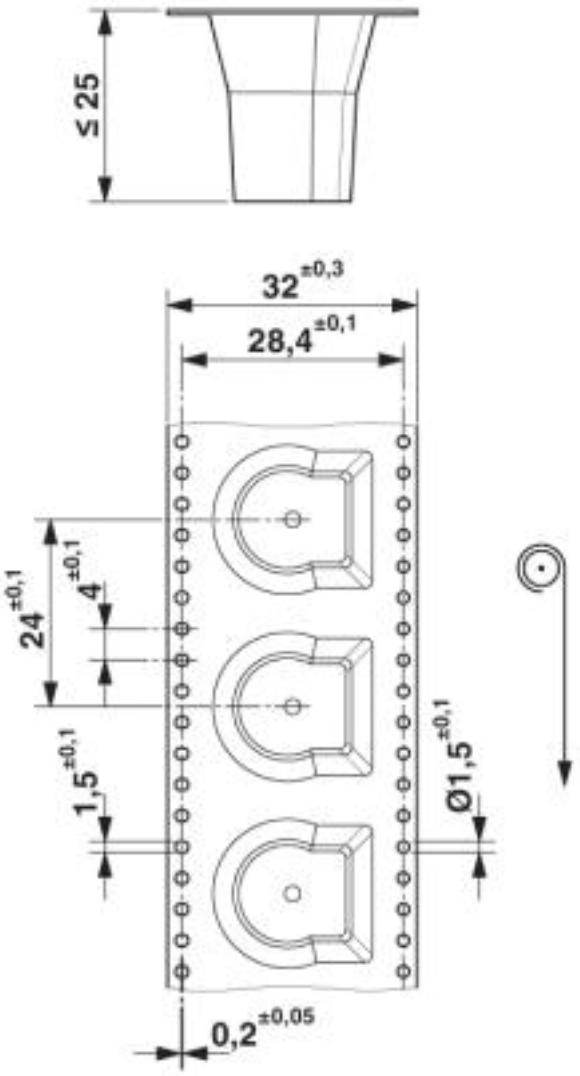

THR tape-on-reel packing

Flush-type connector - SACC-CI-M12FS-5CON TOR 32 - 1457649

Schematic diagram

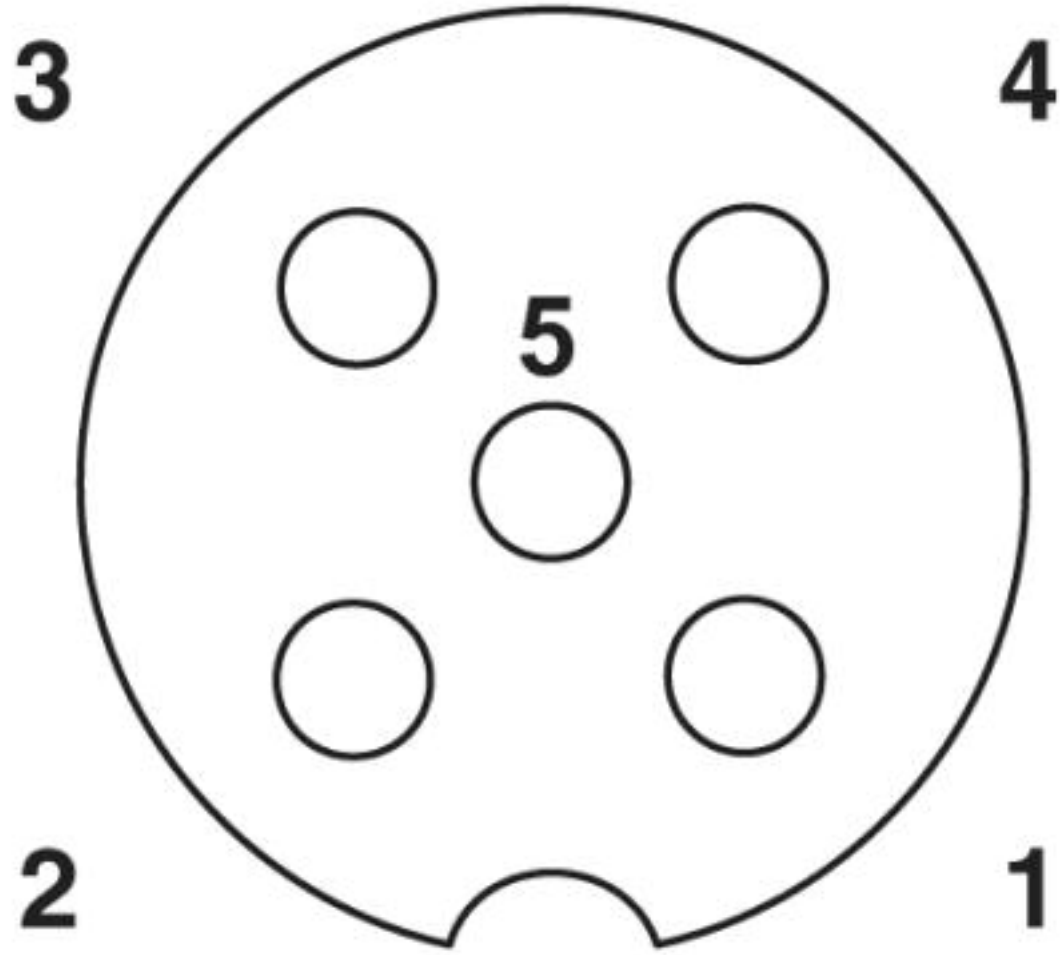

Pin assignment M12 socket, 5-pos., A-coded, socket side view

© Phoenix Contact 2013 - all rights reserved
http://www.phoenixcontact.com