Flush-type connector - SACC-DSI-MS-12CON-M12 SCO - 1559945

Please be informed that the data shown in this PDF Document is generated from our Online Catalog. Please find the complete data in the user's documentation. Our General Terms of Use for Downloads are valid (http://download.phoenixcontact.com)



Sensor/actuator flush-type connector, plug, 12-pos., M12 SPEEDCON, A-coded, rear/screw mounting with M12 thread, with straight solder pins

Key commercial data

package_quantity	20
GTIN	4046356322652

Technical data

Dimensions

Length of the solder pin	6 mm

Ambient conditions

Ambient temperature (operation)	-25 °C ... 85 °C (Plug / socket)
Degree of protection	IP67

General

Rated current at 40°C	1.5 A
Rated voltage	30 V
Number of positions	12
Contact resistance	≤ 3 mΩ
Insulation resistance	≥ 100 MΩ
Coding	A - standard
Standards/regulations	M12 connector IEC 61076-2-101
Status display	No
Surge voltage category	II
Pollution degree	3
Connection method	Solder pins
Mounting type	Rear mounting M12 x 1 With flat nut

Material

Inflammability class according to UL 94	V0
Contact material	CuZn
Contact surface material	Au

Flush-type connector - SACC-DSI-MS-12CON-M12 SCO - 1559945

Technical data

Material

Contact carrier material	PA 66
Material, knurls	Zinc die-cast, nickel-plated
Sealing material	NBR

classifications

eCl@ss

eCl@ss 4.0	27250313
eCl@ss 4.1	27250313
eCl@ss 5.0	27143423
eCl@ss 5.1	27143423
eCl@ss 6.0	27143423
eCl@ss 7.0	27449001
eCl@ss 8.0	27449001

ETIM

ETIM 3.0	EC002061
ETIM 4.0	EC002062
ETIM 5.0	EC002062

UNSPSC

UNSPSC 6.01	31251501
UNSPSC 7.0901	31251501
UNSPSC 11	31251501
UNSPSC 12.01	31251501
UNSPSC 13.2	31251501

approvals

UL Recognized / GOST / GOST /

Approval details

UL Recognized

Nominal voltage UN	30 V
Nominal current IN	1.5 A
mm²/AWG/kcmil	26-20

Flush-type connector - SACC-DSI-MS-12CON-M12 SCO - 1559945

approvals

GOST

Drawings

Drilling diagram

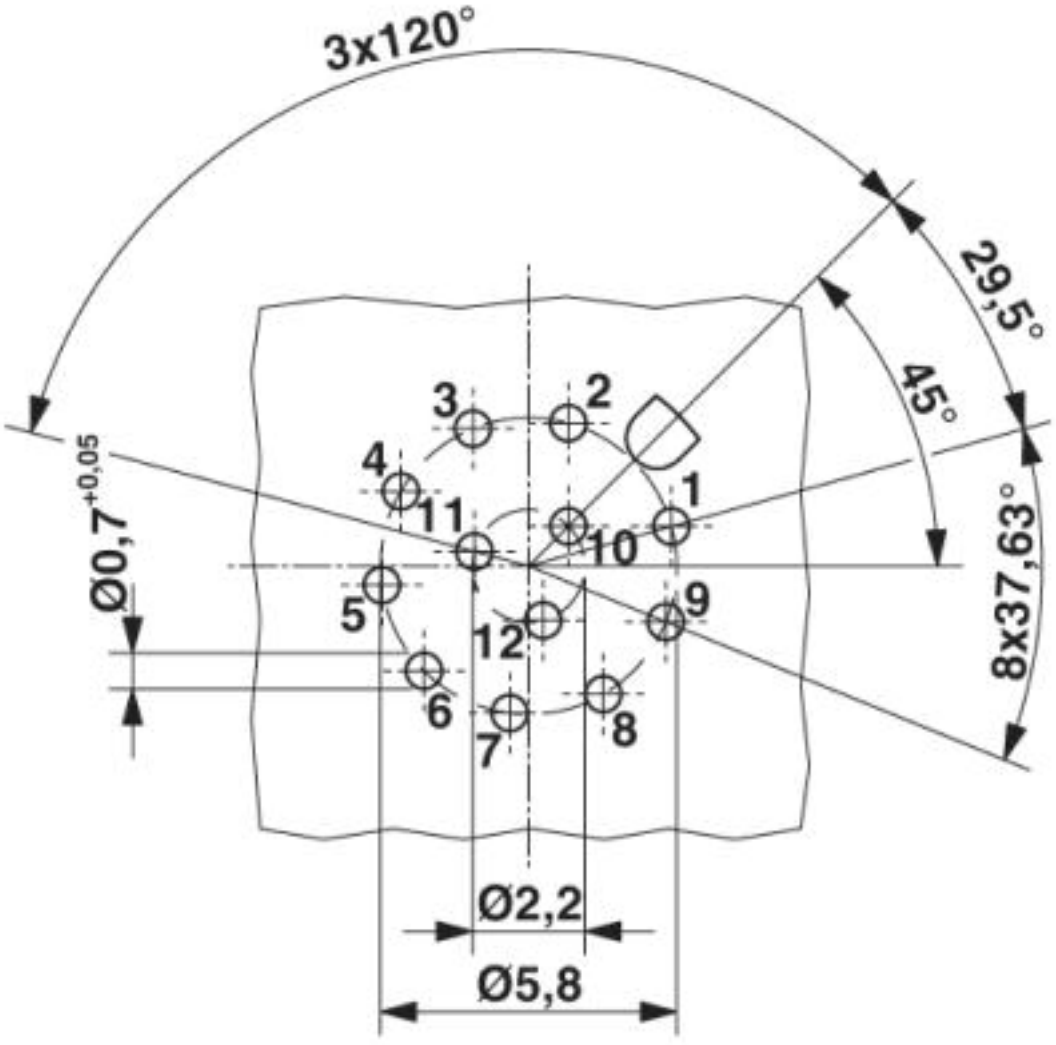

Flush-type connector - SACC-DSI-MS-12CON-M12 SCO - 1559945

Dimensioned drawing

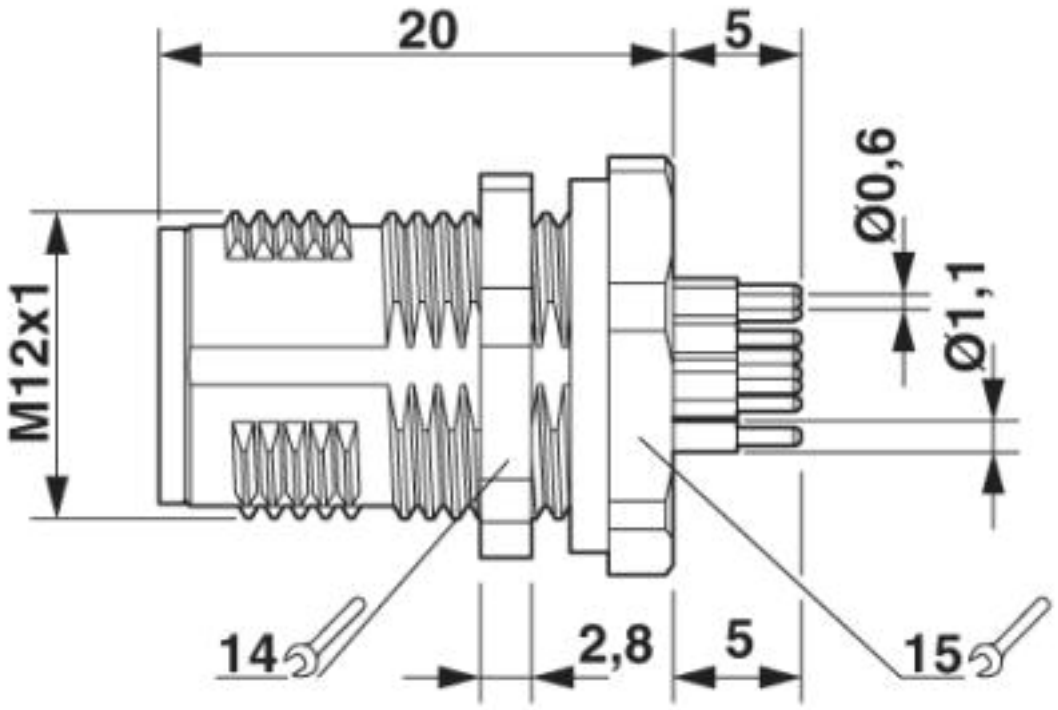

M12 flush-type connector

Flush-type connector - SACC-DSI-MS-12CON-M12 SCO - 1559945

Dimensioned drawing

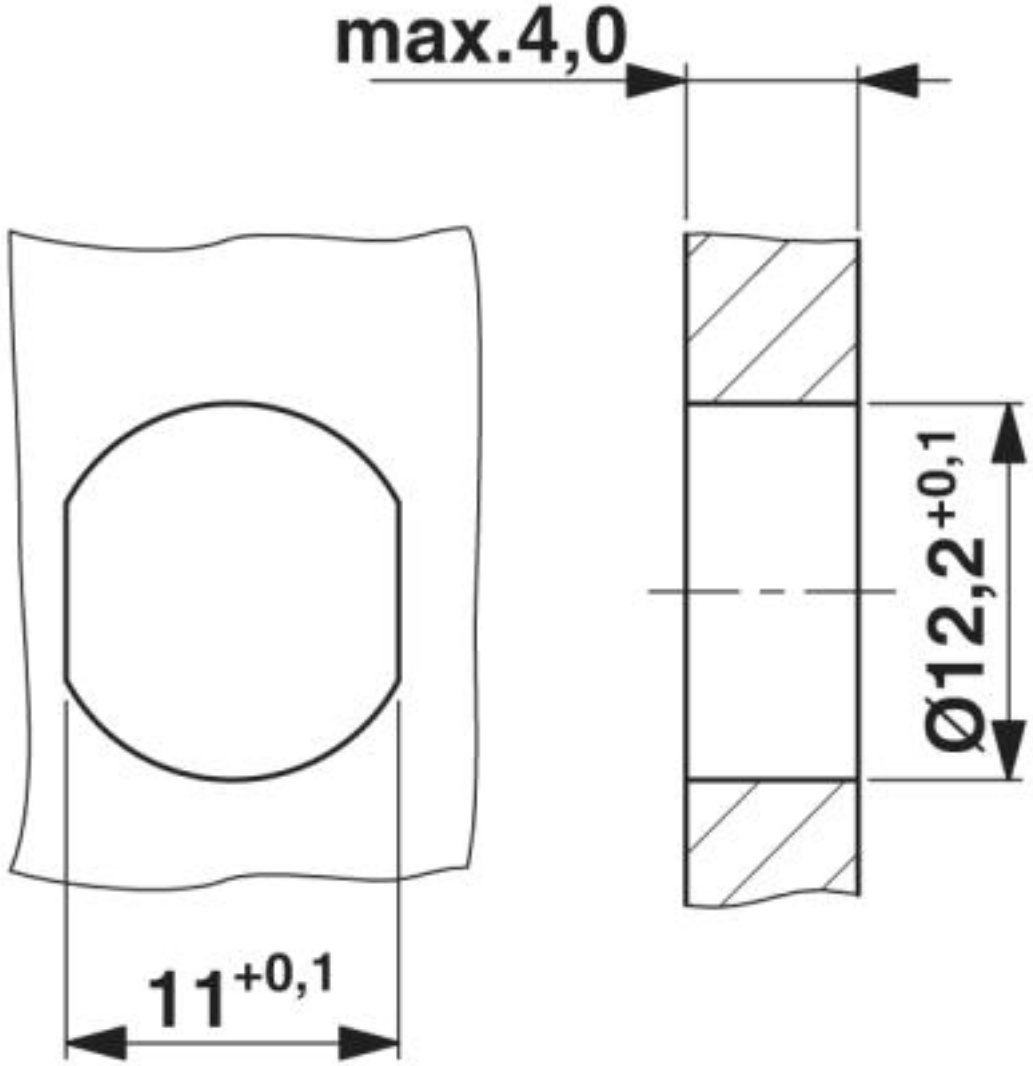

Panel cutout

Flush-type connector - SACC-DSI-MS-12CON-M12 SCO - 1559945

Dimensioned drawing

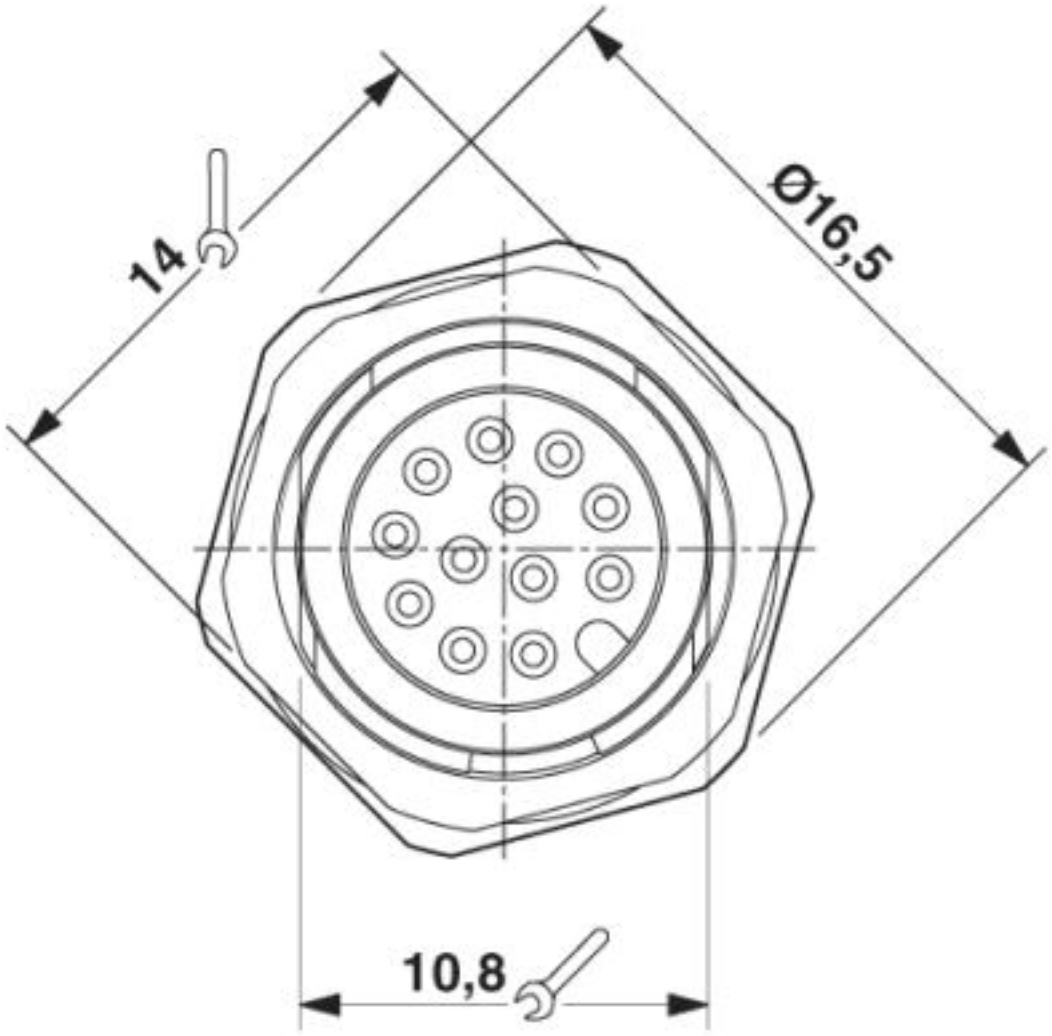

Front view of M12 flush-type connector

Flush-type connector - SACC-DSI-MS-12CON-M12 SCO - 1559945

Schematic diagram

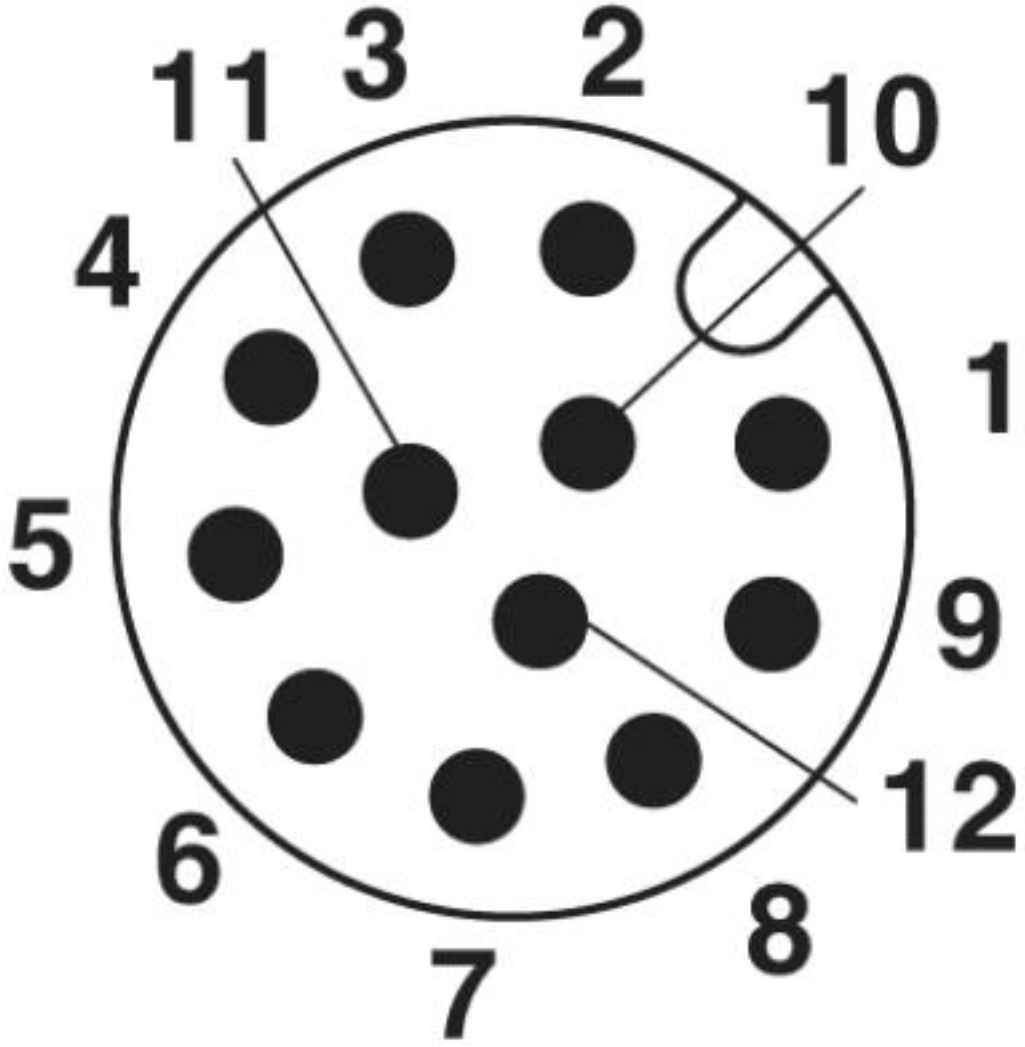

Pin assignment M12 male connector, 12-pos., male side view

© Phoenix Contact 2013 - all rights reserved
http://www.phoenixcontact.com