Sensor/Actuator cable - SAC-5P-M12MS/ 0,6-PUR/ M12FR3LVW - 1693937

Please be informed that the data shown in this PDF Document is generated from our Online Catalog. Please find the complete data in the user's documentation. Our General Terms of Use for Downloads are valid (http://download.phoenixcontact.com)



Sensor/Actuator cable, 5-position, PUR halogen-free, Irradiated, orange RAL 2003, Plug straight M12, A-coded, on Socket angled M12, A-coded, with 3 LEDs, Cable length: 0.6 m, Customer-specific version

Key commercial data

package_quantity	1
GTIN	4017918481742

Technical data

Dimensions

Length of cable	0.6 m

Ambient conditions

Ambient temperature (operation)	-25 °C ... 90 °C (Plug / socket)
Degree of protection	IP65
Degree of protection	IP67
Degree of protection	IP68

General

Rated current at 40°C	4 A
Rated voltage	24 V
Number of positions	5
Contact resistance	≤ 5 mΩ
Insulation resistance	≥ 100 MΩ
Coding	A - standard
Status display	3 LEDs
Surge voltage category	II
Pollution degree	3
Insertion/withdrawal cycles	≥ 100

Material

Inflammability class according to UL 94	HB
Contact material	CuSn
Contact surface material	Ni/Au
Contact carrier material	TPU GF

Sensor/Actuator cable - SAC-5P-M12MS/ 0,6-PUR/ M12FR3LVW - 1693937

Technical data

Material

Material of grip body	TPU, hardly inflammable, self-extinguishing
Material, knurls	Zinc die-cast, nickel-plated
Sealing material	NBR

Cable

Cable type	PUR irradiated halogen-free orange
Cable type (abbreviation)	150
Cable abbreviation	D12YSL11X-JB
Conductor cross section	4x 0.34 mm² (signal line)
Conductor cross section	1x 0.5 mm² (PE connection)
AWG signal line	22
AWG power supply	20
Conductor structure signal line	42x 0.10 mm
Conductor structure, voltage supply	24x 0.15 mm
Wire colors	Brown, blue, black, white, green/yellow
Overall twist	5 cores, twisted
External sheath, color	orange RAL 2003
External cable diameter D	5.2 mm ± 0.2 mm
Smallest bending radius, fixed installation	min. 20 mm
Smallest bending radius, movable installation	min. 30 mm
Number of bending cycles	5000000
Bending radius	52 mm
Traversing path	10 m
Traversing rate	3 m/s
Outer sheath, material	PUR
Material conductor insulation	PE
Conductor material	Bare Cu litz wires
Conductor resistance	≤ 57.5 Ω/km (with 0.34 mm² conductor cross section)
Conductor resistance	≤ 39 Ω/km (with 0.5 mm² conductor cross section)
Nominal voltage, cable	250 V (AC)
Test voltage, cable	2000 V (50 Hz, 5 minutes)
Special properties	Silicone-free
Flame resistance	DIN VDE 0472 part 804, test type B
Halogen-free	The cable is halogen-free
Other resistance	hydrolysis and microbe resistant
Other resistance	UV resistant
Other resistance	Resistant to welding splashes
Ambient temperature (operation)	-50 °C ... 105 °C (cable, fixed installation)
Ambient temperature (operation)	-40 °C ... 105 °C (cable, flexible installation)

Sensor/Actuator cable - SAC-5P-M12MS/ 0,6-PUR/ M12FR3LVW - 1693937

classifications

eCl@ss

eCl@ss 4.0	27060306
eCl@ss 4.1	27060306
eCl@ss 5.0	27061801
eCl@ss 5.1	27061801
eCl@ss 6.0	27061801
eCl@ss 7.0	27061801
eCl@ss 8.0	27061801

ETIM

ETIM 2.0	EC000830
ETIM 3.0	EC001855
ETIM 4.0	EC001855
ETIM 5.0	EC001855

UNSPSC

UNSPSC 6.01	31251501
UNSPSC 7.0901	31251501
UNSPSC 11	31251501
UNSPSC 12.01	31251501
UNSPSC 13.2	31251501

approvals

UL Listed / cUL Listed / cULus Listed /

Approval details

UL Listed

Nominal voltage UN	24 V
Nominal current IN	4 A
mm²/AWG/kcmil	

cUL Listed

Nominal voltage UN	24 V
Nominal current IN	4 A

Sensor/Actuator cable - SAC-5P-M12MS/ 0,6-PUR/ M12FR3LVW - 1693937

approvals

mm²/AWG/kcmil	

cULus Listed

Drawings

Dimensioned drawing

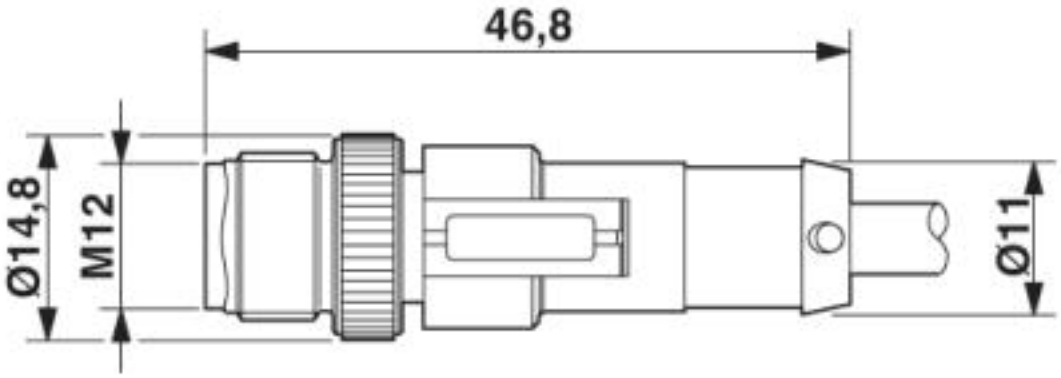

M12 x 1 plug, straight

Sensor/Actuator cable - SAC-5P-M12MS/ 0,6-PUR/ M12FR3LVW - 1693937

Dimensioned drawing

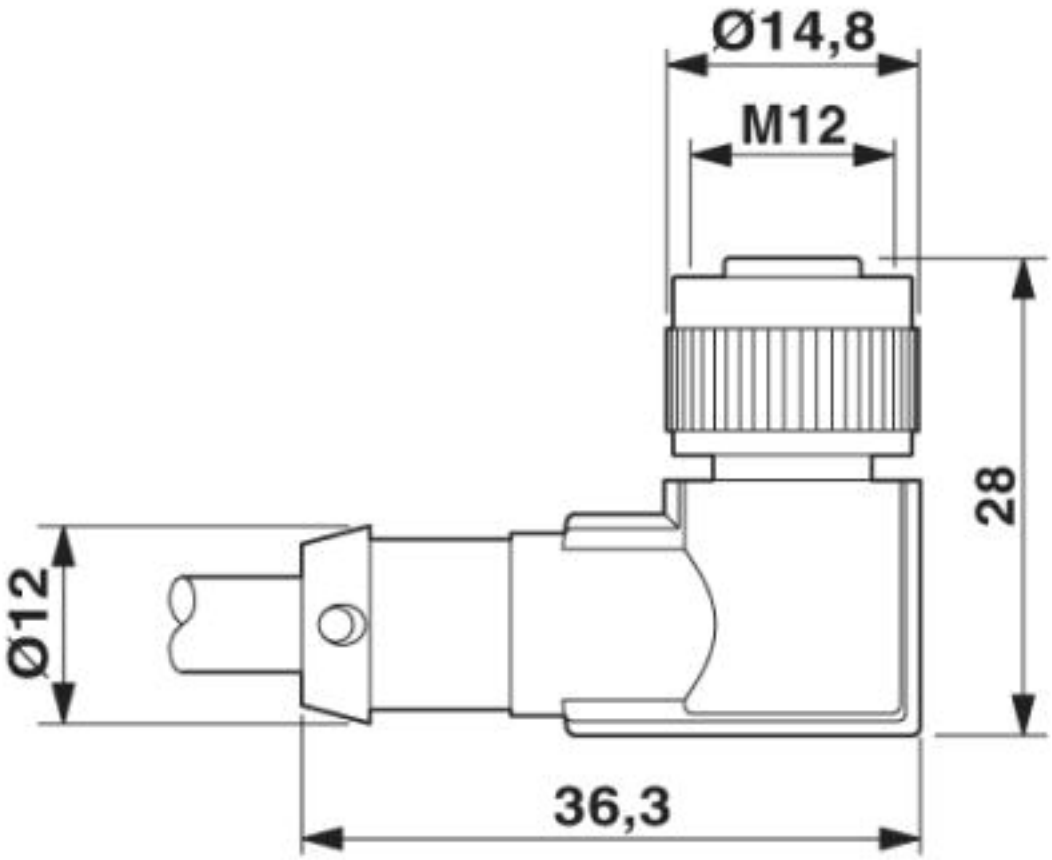

M12 x 1 socket, angled

Sensor/Actuator cable - SAC-5P-M12MS/ 0,6-PUR/ M12FR3LVW - 1693937

Schematic diagram

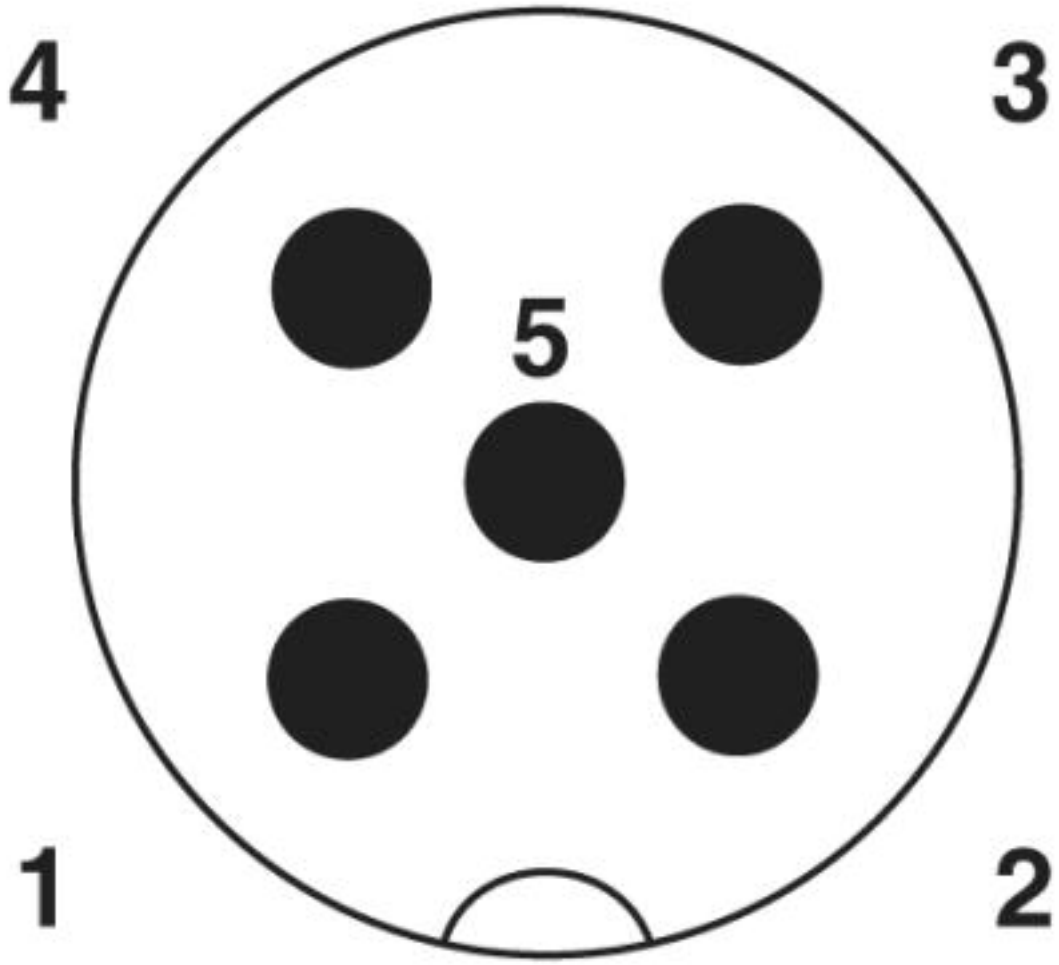

Pin assignment M12 male connector, 5-pos., A-coded, male side

Sensor/Actuator cable - SAC-5P-M12MS/ 0,6-PUR/ M12FR3LVW - 1693937

Schematic diagram

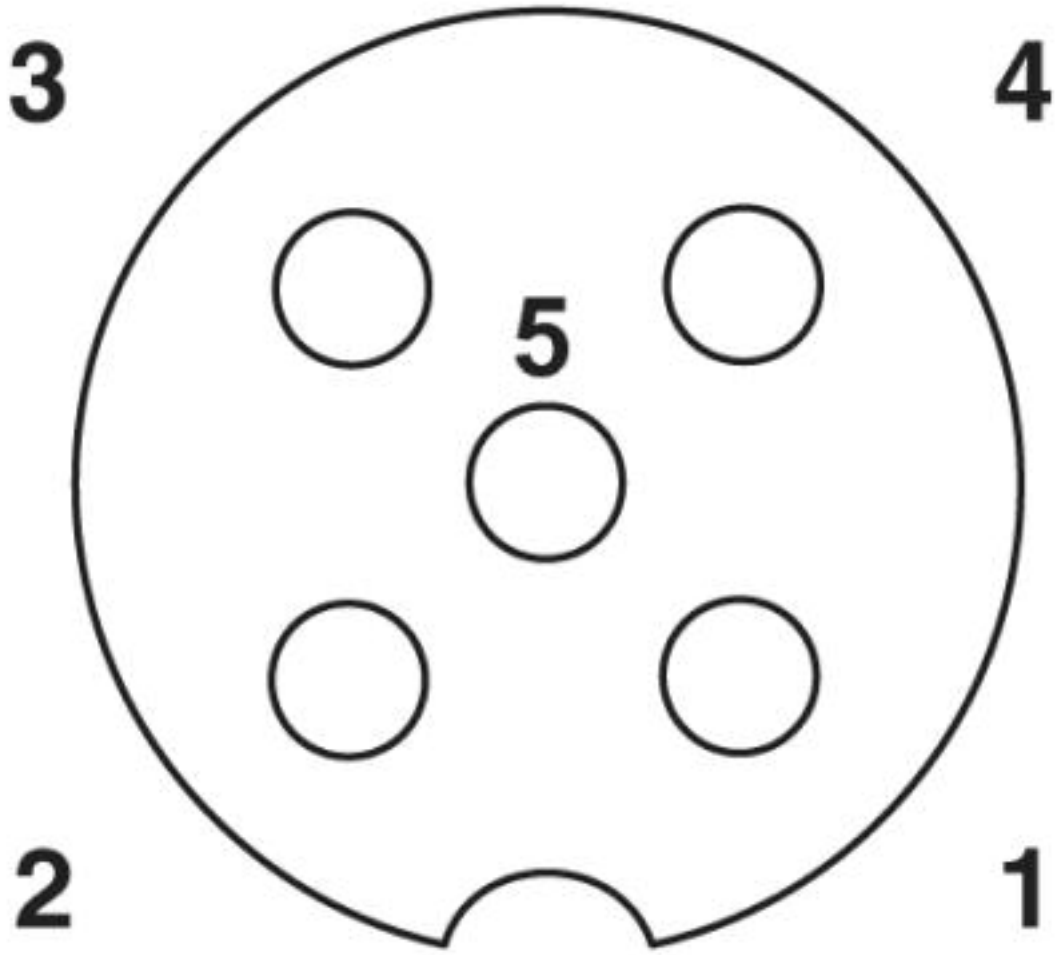

Pin assignment M12 socket, 5-pos., A-coded, socket side view

Sensor/Actuator cable - SAC-5P-M12MS/ 0,6-PUR/ M12FR3LVW - 1693937

Cable cross section



PUR irradiated halogen-free orange [150]

© Phoenix Contact 2013 - all rights reserved
http://www.phoenixcontact.com