Panel feed-through - SACC-DSI-M12FS-5CON-PG9/0,5 P - 1436356

Please be informed that the data shown in this PDF Document is generated from our Online Catalog. Please find the complete data in the user's documentation. Our General Terms of Use for Downloads are valid (http://download.phoenixcontact.com)



Sensor/Actuator flush-type connector, socket, 5-pos., M12, A-coded, rear/screw mounting with Pg9 thread, with 0.5 m TPE litz wire, 5 x 0.25 mm², plastic version

Key commercial data

package_quantity	1
GTIN	4046356438322

Technical data

Dimensions

Length of cable	0.5 m

Ambient conditions

Ambient temperature (operation)	-40 °C ... 85 °C (Passive state, plug/socket)
Degree of protection	IP67

General

Rated current at 40°C	4 A
Rated voltage	60 V
Number of positions	5
Contact resistance	≤ 3 mΩ
Insulation resistance	≥ 100 MΩ
Coding	A - standard
Standards/regulations	M12 connector IEC 61076-2-101
Status display	No
Surge voltage category	II
Pollution degree	3
Connection method	Individual wires
Mounting type	Rear mounting Pg9 With flat nut

Material

Inflammability class according to UL 94	HB
Contact material	CuZn
Contact surface material	Au
Contact carrier material	PA 66

Panel feed-through - SACC-DSI-M12FS-5CON-PG9/0,5 P - 1436356

Technical data

Material

Material, knurls	PA 66
Sealing material	Viton

Cable

Cable type	TPE litz wire
Conductor cross section	0.25 mm²
AWG signal line	24
Conductor structure signal line	14x 0.15 mm
Core diameter including insulation	1.15 mm ±0.07 mm
Thickness, insulation	0.21 mm
Wire colors	Black, brown,blue, white, gray
Material conductor insulation	TPE
Conductor material	Tin-plated Cu litz wires
Insulation resistance	≥ 20 MΩ*km
Conductor resistance	≤ 80 Ω/km
Nominal voltage, cable	300 V
Test voltage, cable	2000 V AC
Ambient temperature (operation)	-40 °C ... 85 °C (Cable, fixed installation, passive state)

classifications

eCl@ss

eCl@ss 4.0	27250313
eCl@ss 4.1	27250313
eCl@ss 5.0	27143423
eCl@ss 5.1	27143423
eCl@ss 6.0	27143423
eCl@ss 7.0	27449001
eCl@ss 8.0	27449001

ETIM

ETIM 3.0	EC002062
ETIM 4.0	EC002061
ETIM 5.0	EC002061

UNSPSC

UNSPSC 6.01	31251501
UNSPSC 7.0901	31251501
UNSPSC 11	31251501
UNSPSC 12.01	31251501
UNSPSC 13.2	31251501

Panel feed-through - SACC-DSI-M12FS-5CON-PG9/0,5 P - 1436356

approvals

GOST /

Approval details

GOST

Drawings

Dimensioned drawing

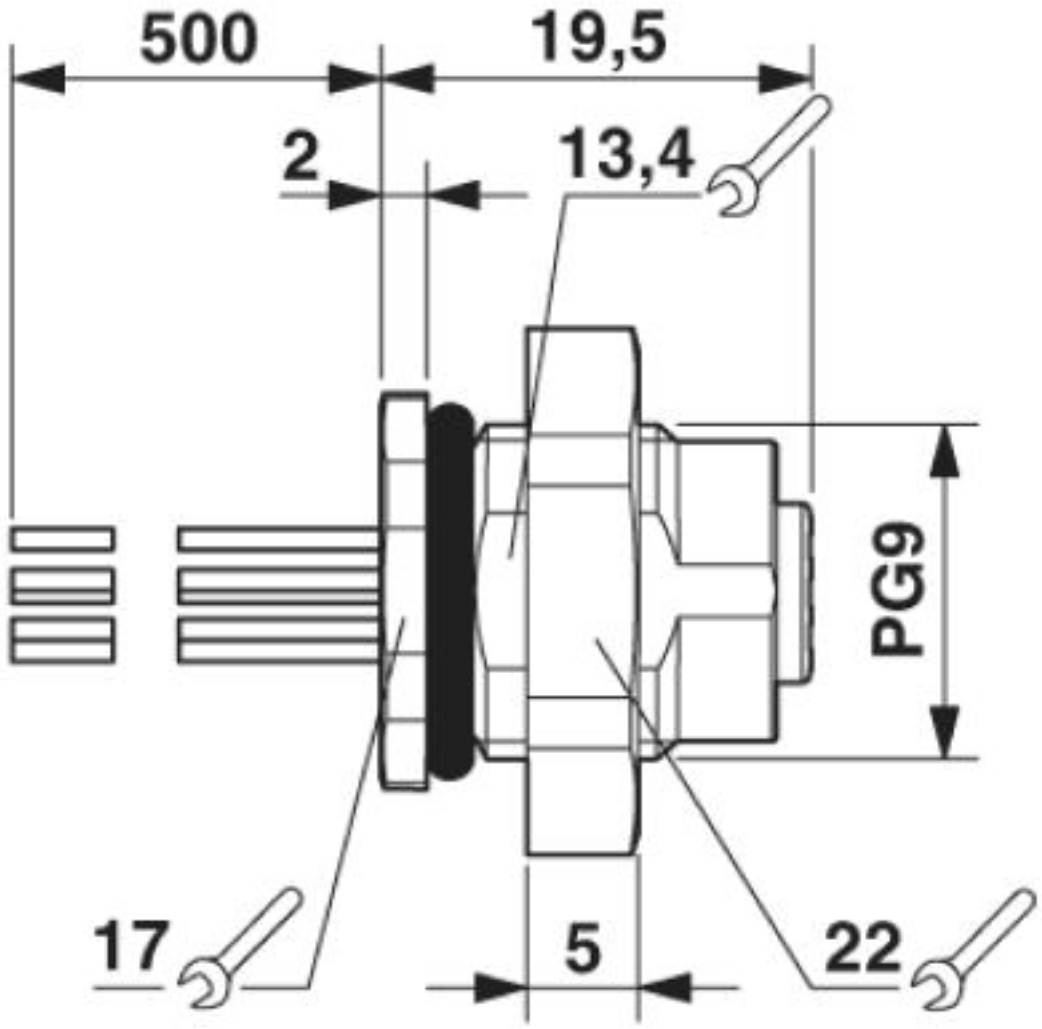

M12 flush-type connector

Panel feed-through - SACC-DSI-M12FS-5CON-PG9/0,5 P - 1436356

Dimensioned drawing

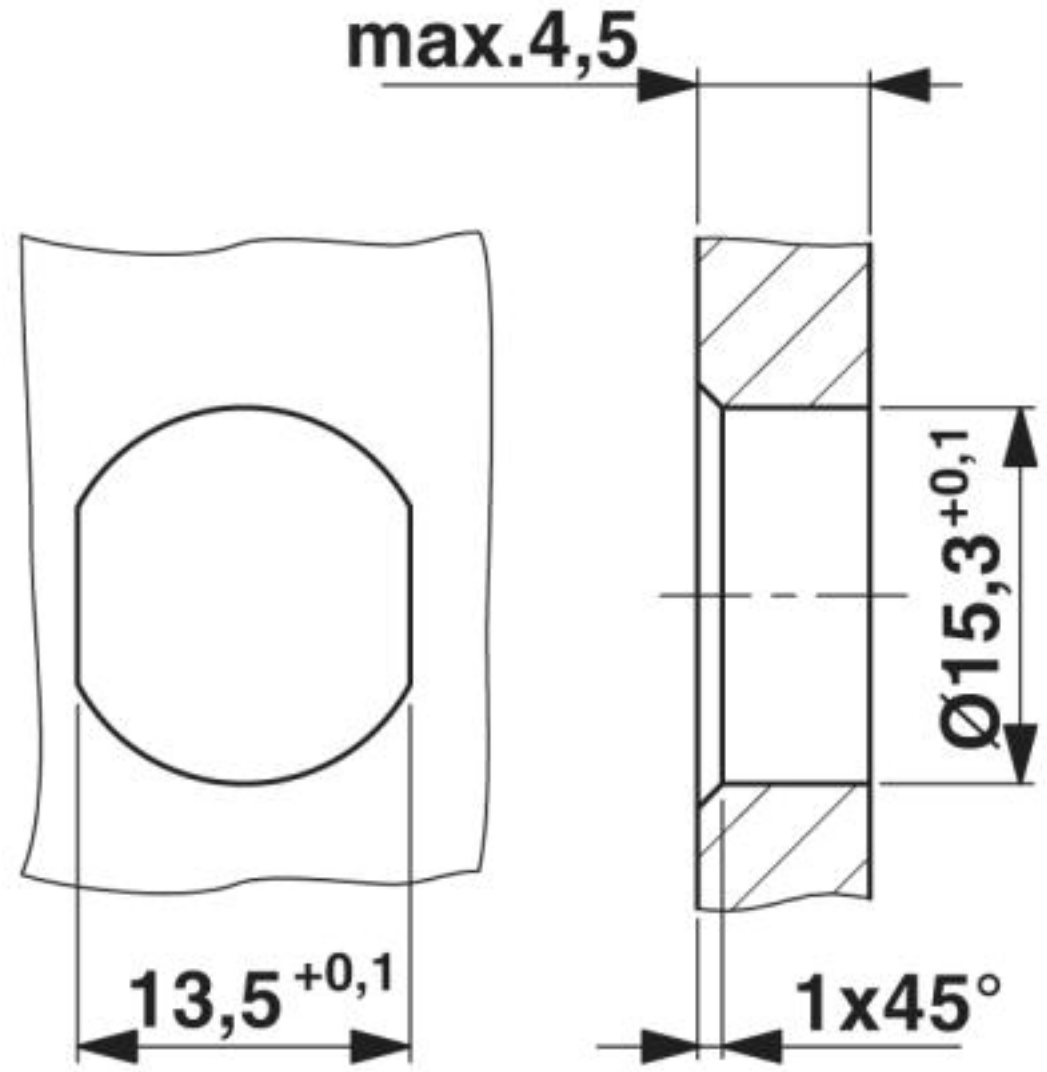

Housing cutout for M12 fastening thread, mounting panel with feed-through hole (alternative with surface as protection against rotation)

Panel feed-through - SACC-DSI-M12FS-5CON-PG9/0,5 P - 1436356

Circuit diagram

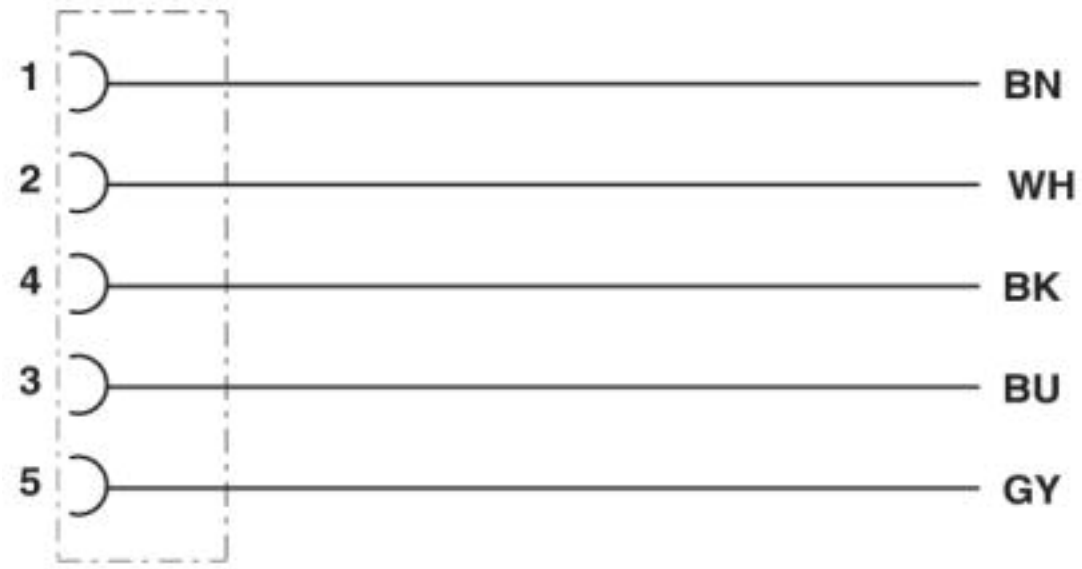

Contact assignment of the M12 socket

Panel feed-through - SACC-DSI-M12FS-5CON-PG9/0,5 P - 1436356

Schematic diagram

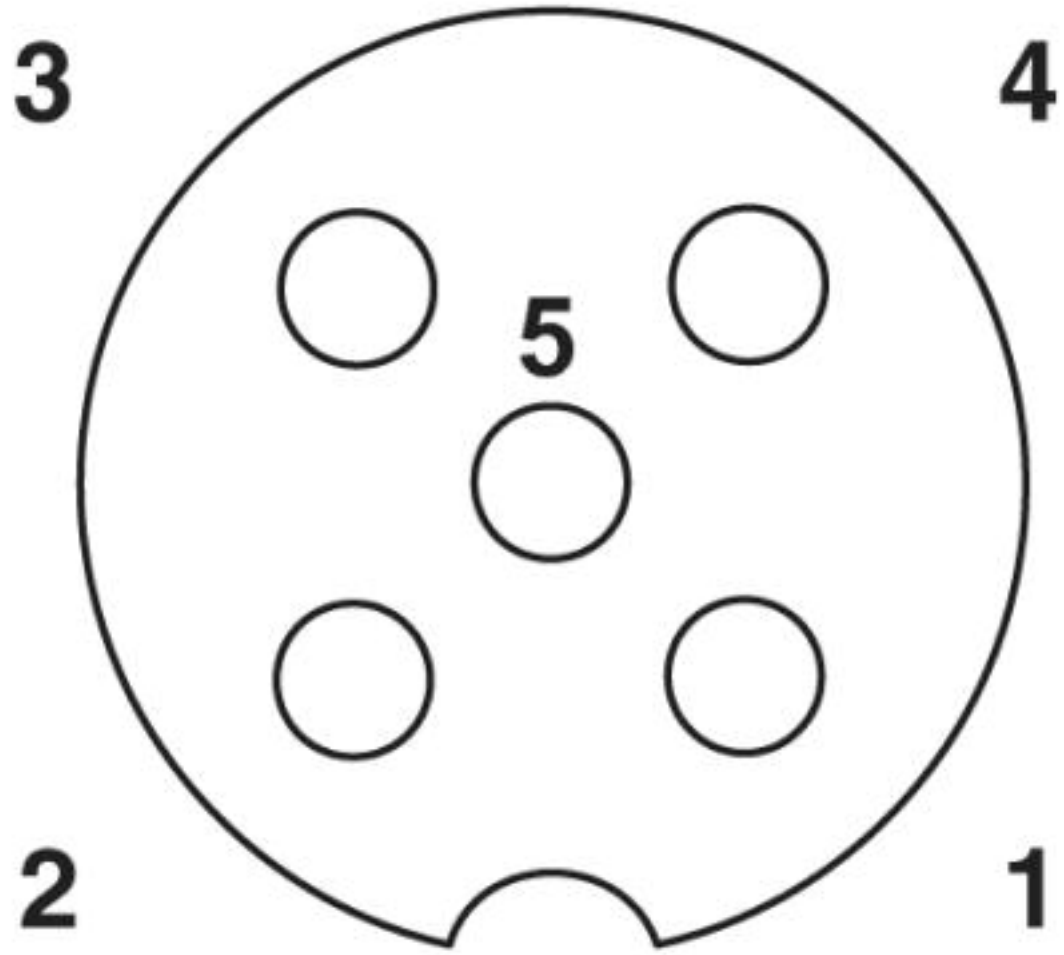

Pin assignment M12 socket, 5-pos., A-coded, socket side view

© Phoenix Contact 2013 - all rights reserved
http://www.phoenixcontact.com