Connector - SACC-M12FSB-5CON-DM 5-8 SH VA - 1440135

Please be informed that the data shown in this PDF Document is generated from our Online Catalog. Please find the complete data in the user's documentation. Our General Terms of Use for Downloads are valid (http://download.phoenixcontact.com)



Connector, 5-position, shielded, Socket straight M12, B-coded, Screw connection, Knurl material: High-grade steel, External cable diameter 5.5 mm ... 8.6 mm

Product Features

- Safe use in the field, thanks to a high degree of protection
- Flexible: connectors for on-site assembly
- Screw connection: proven connection technology for a large selection of different conductors
- Reliable signal transmission - 360° shielding in environments with electromagnetic interference

Key commercial data

package_quantity	1
GTIN	4046356483339

Technical data

Dimensions

External diameter	5.5 mm ... 8.6 mm
Stripping length of the sheath	35 mm
Stripping length of the individual wire	5 mm

Ambient conditions

Ambient temperature (operation)	-40 °C ... 85 °C
Degree of protection	IP67
Degree of protection	IP69K

General

Rated current at 40°C	4 A
Rated voltage	60 V
Number of positions	5
Contact resistance	≤ 3 mΩ
Insulation resistance	≥ 100 MΩ
Coding	B - inverse
Standards/regulations	M12 connector IEC 61076-2-101
Status display	No
Surge voltage category	II
Pollution degree	3
Connection method	Screw connection

Connector - SACC-M12FSB-5CON-DM 5-8 SH VA - 1440135

Technical data

General

Conductor cross section	0.25 mm² ... 0.75 mm²
AWG conductor cross section	24 ... 18
Insertion/withdrawal cycles	≥ 100
Torque	0.4 Nm (M12 connector)
Torque	0.2 Nm (Screw terminal blocks)
Torque	0.8 Nm ... 1 Nm (Pressure screw for outer cable diameter 4 mm ... 8 mm)
Torque	1 Nm ... 1.4 Nm (Pressure screw for outer cable diameter 8 mm ... 12 mm)
Tightening torque	Screw plug insert with sleeve housing as far it will go
Assembly instructions	The wires can be connected both with ferrules and without ferrules

Material

Inflammability class according to UL 94	V0
Contact material	CuZn
Contact surface material	Au
Contact carrier material	PA 66
Material of grip body	High-grade steel
Material, knurls	High-grade steel
Sealing material	NBR

classifications

eCl@ss

eCl@ss 4.0	27250313
eCl@ss 4.1	27250313
eCl@ss 5.0	27143423
eCl@ss 5.1	27143423
eCl@ss 6.0	27143423
eCl@ss 7.0	27449001
eCl@ss 8.0	27449001

ETIM

ETIM 3.0	EC002061
ETIM 4.0	EC002062
ETIM 5.0	EC002062

UNSPSC

UNSPSC 6.01	31251501
UNSPSC 7.0901	31251501
UNSPSC 11	31251501
UNSPSC 12.01	31251501
UNSPSC 13.2	31251501

Connector - SACC-M12FSB-5CON-DM 5-8 SH VA - 1440135

approvals

GOST / GOST /

Approval details

GOST

Drawings

Dimensioned drawing

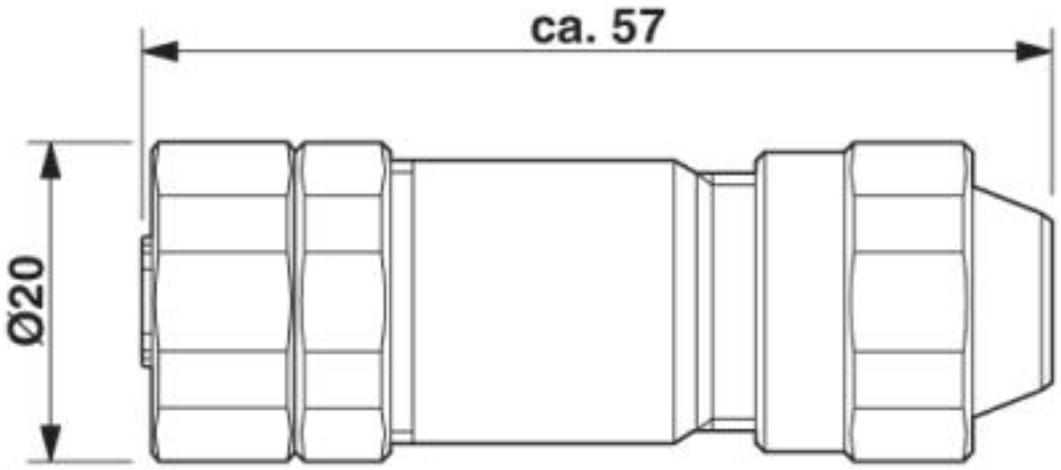

M12 x 1 socket, straight, shielded

Connector - SACC-M12FSB-5CON-DM 5-8 SH VA - 1440135

Schematic diagram

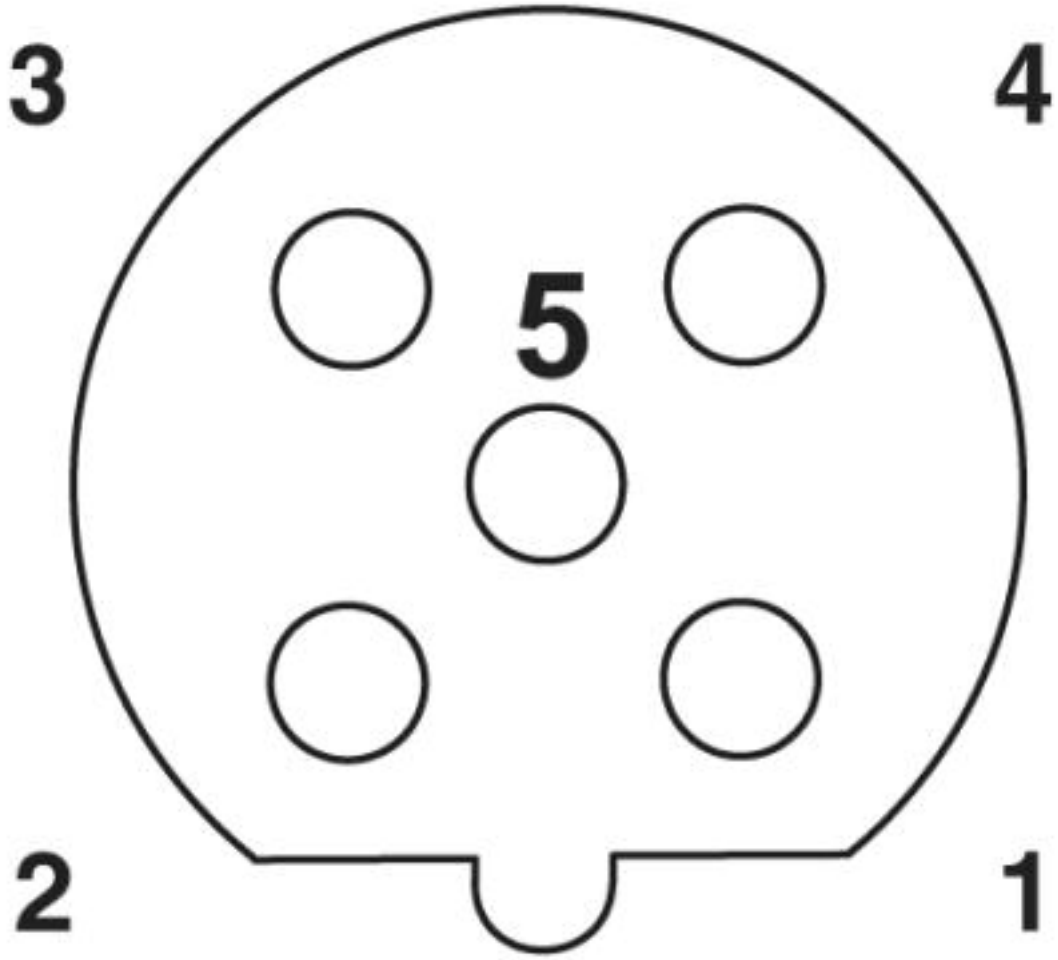

Pin assignment M12 socket, 5-pos., B-coded, female side

© Phoenix Contact 2013 - all rights reserved
http://www.phoenixcontact.com