Sensor/Actuator cable - SAC-4P- 3,0-PVC/M12FR - 1693526

Please be informed that the data shown in this PDF Document is generated from our Online Catalog. Please find the complete data in the user's documentation. Our General Terms of Use for Downloads are valid (http://download.phoenixcontact.com)



Sensor/Actuator cable, 4-position, PVC, Black RAL 9005, Free cable end, on Socket angled M12, A-coded, Cable length: 3 m

Key commercial data

package_quantity	1
GTIN	4017918443948

Technical data

Dimensions

Length of cable	3 m

General

Number of positions	4
Insertion/withdrawal cycles	≥ 100

Material

Contact material	CuSn
Contact surface material	Ni/Au
Contact carrier material	TPU GF
Material of grip body	TPU, hardly inflammable, self-extinguishing
Material, knurls	Zinc die-cast, nickel-plated
Sealing material	NBR

Cable

Cable type	PVC black
Cable type (abbreviation)	PVC
Cable abbreviation	LiYY
UL AWM style	2464 / 1729 (80°C/300 V)
Conductor cross section	4x 0.34 mm² (signal line)
AWG signal line	22
Conductor structure signal line	42x 0.10 mm
Core diameter including insulation	1.45 mm ±0.02 mm
Thickness, insulation	≥ 0.23 mm (Core insulation)
Wire colors	brown, white, blue, black
Overall twist	4 wires, twisted

Sensor/Actuator cable - SAC-4P- 3,0-PVC/M12FR - 1693526

Technical data

Cable

External sheath, color	Black RAL 9005
Outer sheath thickness	≥ 0.76 mm
External cable diameter D	5.2 mm ±0.15 mm
Minimum bending radius, fixed installation	5 x D
Minimum bending radius, flexible installation	10 x D
Cable weight	40 kg/km
Outer sheath, material	PVC
Material conductor insulation	PVC
Conductor material	Bare Cu litz wires
Insulation resistance	≥ 200 MΩ*km (at 20 °C)
Conductor resistance	max. 58 Ω/km (at 20 °C)
Nominal voltage, cable	≤ 300 V
Test voltage, cable	≥ 3000 V
Flame resistance	As per UL-Style 2464
Flame resistance	According to UL 758/1581 FT1
Resistance to oil	According to DIN EN 60811-2-1, 168 h at 90°C
Ambient temperature (operation)	-40 °C ... 80 °C (cable, fixed installation)
Ambient temperature (operation)	-25 °C ... 80 °C (cable, flexible installation)

classifications

eCl@ss

eCl@ss 4.0	27060306
eCl@ss 4.1	27060306
eCl@ss 5.0	27061801
eCl@ss 5.1	27061801
eCl@ss 6.0	27061801
eCl@ss 7.0	27061801
eCl@ss 8.0	27061801

ETIM

ETIM 2.0	EC000830
ETIM 3.0	EC001855
ETIM 4.0	EC001855
ETIM 5.0	EC001855

UNSPSC

UNSPSC 6.01	31251501
UNSPSC 7.0901	31251501
UNSPSC 11	31251501
UNSPSC 12.01	31251501
UNSPSC 13.2	31251501

Sensor/Actuator cable - SAC-4P- 3,0-PVC/M12FR - 1693526

approvals

UL Listed / cUL Listed / cULus Listed /

Approval details

UL Listed

Nominal voltage UN	300 V
Nominal current IN	4 A
mm²/AWG/kcmil	

cUL Listed

Nominal voltage UN	300 V
Nominal current IN	4 A
mm²/AWG/kcmil	

cULus Listed

Drawings

Sensor/Actuator cable - SAC-4P- 3,0-PVC/M12FR - 1693526

Dimensioned drawing

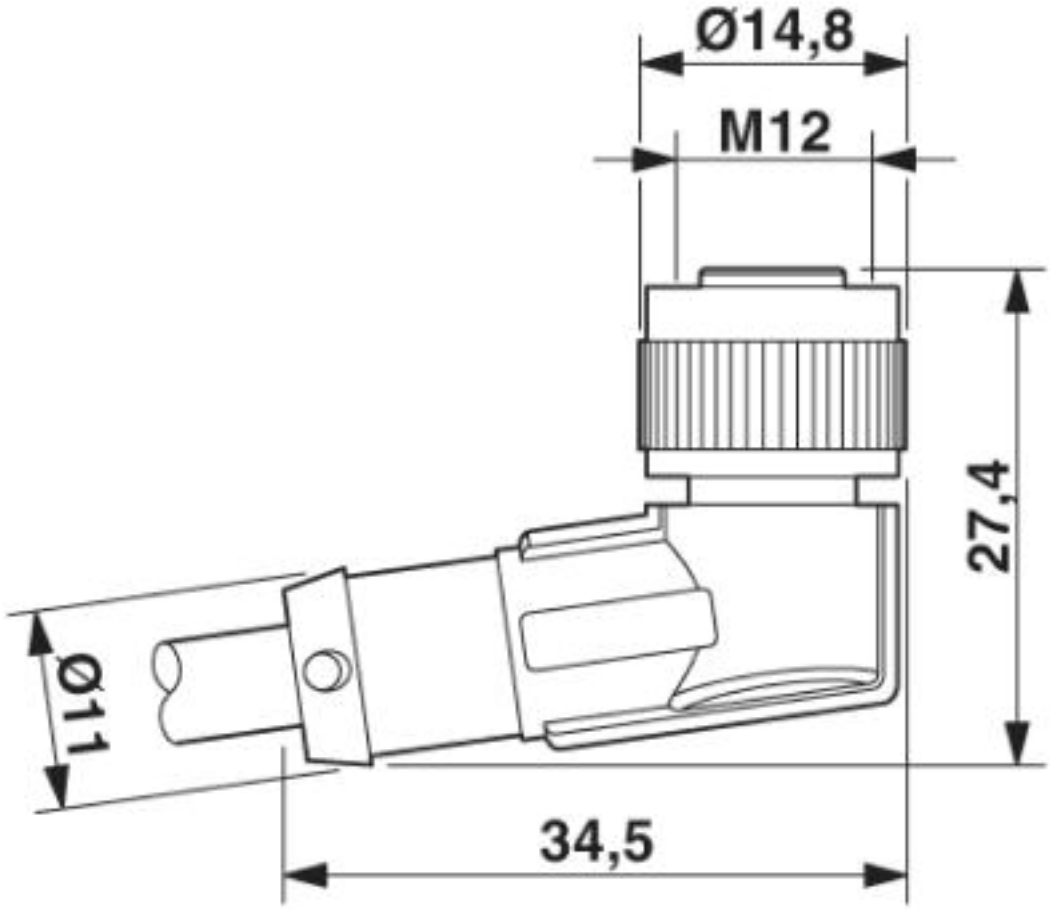

M12 x 1 socket, angled

© Phoenix Contact 2013 - all rights reserved
http://www.phoenixcontact.com