Connector - SACC-MINFR-5CON-PG11/2,5 - 1456297

Please be informed that the data shown in this PDF Document is generated from our Online Catalog. Please find the complete data in the user's documentation. Our General Terms of Use for Downloads are valid (http://download.phoenixcontact.com)



Sensor/actuator connector, female, angled, 5-pos., 7-8", screw connection, metal knurl, cable gland Pg11

Product Features

- Safe use in the field, thanks to a high degree of protection
- Flexible: connectors for on-site assembly
- Screw connection: proven connection technology for a large selection of different conductors

Key commercial data

package_quantity	1
GTIN	4046356616928

Technical data

Dimensions

External diameter	8 mm ... 10 mm

Ambient conditions

Ambient temperature (operation)	-25 °C ... 85 °C (Plug / socket)
Degree of protection	IP67

General

Rated current at 40°C	9 A
Rated voltage	300 V
Number of positions	5
Contact resistance	≤ 5 mΩ
Insulation resistance	≥ 100 MΩ
Coding	A - standard
Status display	No
Surge voltage category	II
Pollution degree	3
Connection method	Screw connection
Conductor cross section	0.34 mm² ... 2.5 mm²
AWG conductor cross section	22 ... 16
Insertion/withdrawal cycles	≥ 100
Torque	0.8 Nm (7/8" connectors)
Torque	0.4 Nm (Screw terminal blocks)

Connector - SACC-MINFR-5CON-PG11/2,5 - 1456297

Technical data

General

Torque	1 Nm ... 1.4 Nm (Pressure nut)
Tightening torque	Screw plug insert with sleeve housing as far it will go
Assembly instructions	The wires can be connected both with ferrules and without ferrules

Material

Inflammability class according to UL 94	HB
Contact material	CuZn
Contact surface material	Au
Contact carrier material	PUR / PA66
Material of grip body	PBT
Material, knurls	Zinc die-cast, nickel-plated

classifications

eCl@ss

eCl@ss 4.0	27060306
eCl@ss 4.1	27060306
eCl@ss 5.0	27061801
eCl@ss 5.1	27061801
eCl@ss 6.0	27279221
eCl@ss 7.0	27440104
eCl@ss 8.0	27440104

ETIM

ETIM 4.0	EC002062
ETIM 5.0	EC002062

UNSPSC

UNSPSC 6.01	31251501
UNSPSC 7.0901	31251501
UNSPSC 11	31251501
UNSPSC 12.01	31251501
UNSPSC 13.2	31251501

approvals

GOST /

Approval details

GOST

Connector - SACC-MINFR-5CON-PG11/2,5 - 1456297

accessories

Torque tool

TSD 08 SAC - 1212597



TSD-M 1,2NM - 1212224



Screwdriver tools

TSD-M SAC-BIT ADAPTER - 1212600



SAC BIT MIN-D25 - 1212512



Protective cap

PROT-MINMS-PA-CHAIN - 1430925



Connector - SACC-MINFR-5CON-PG11/2,5 - 1456297

Drawings

Functional drawing

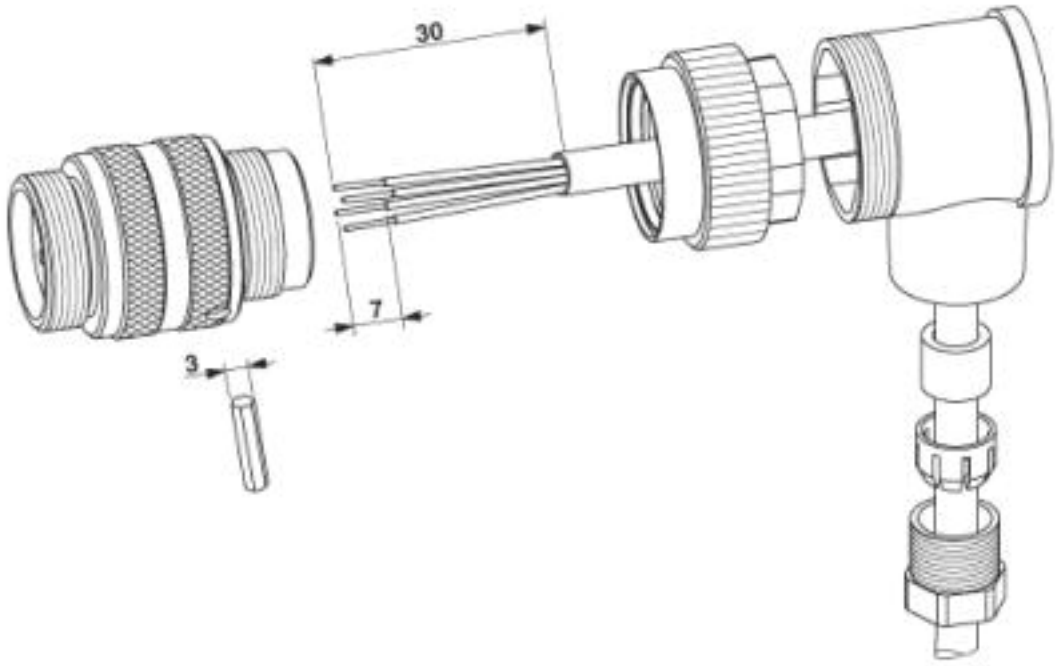

Connector - SACC-MINFR-5CON-PG11/2,5 - 1456297

Dimensioned drawing

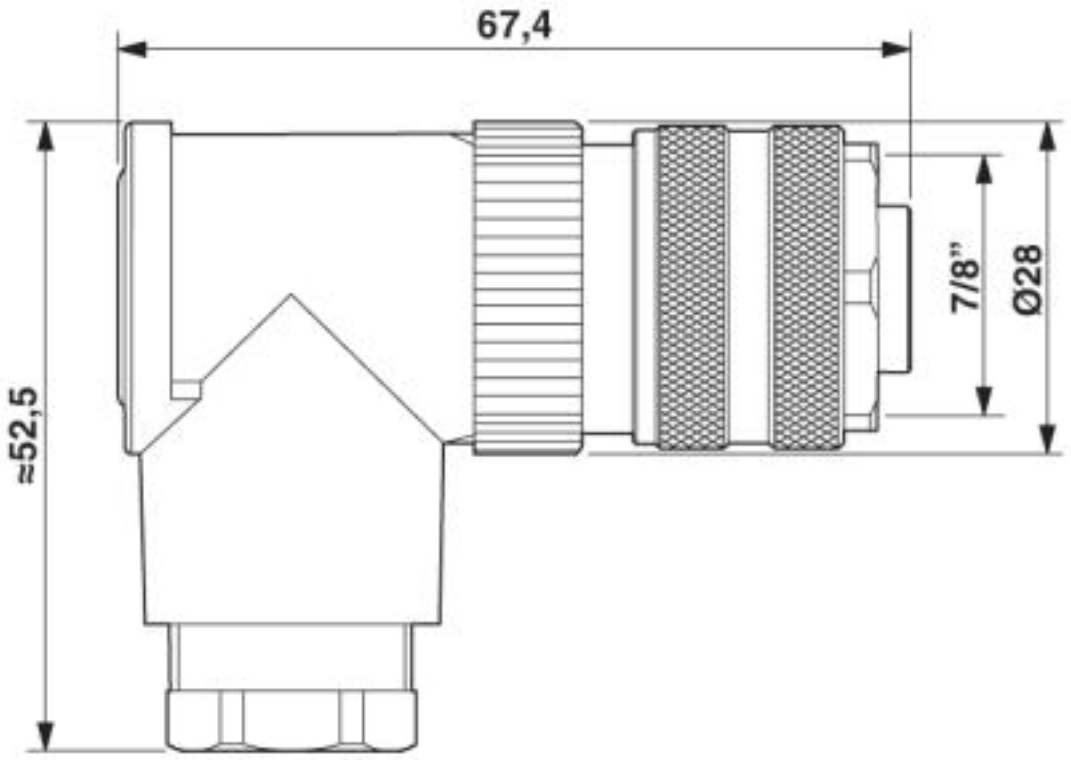

Connector - SACC-MINFR-5CON-PG11/2,5 - 1456297

Schematic diagram

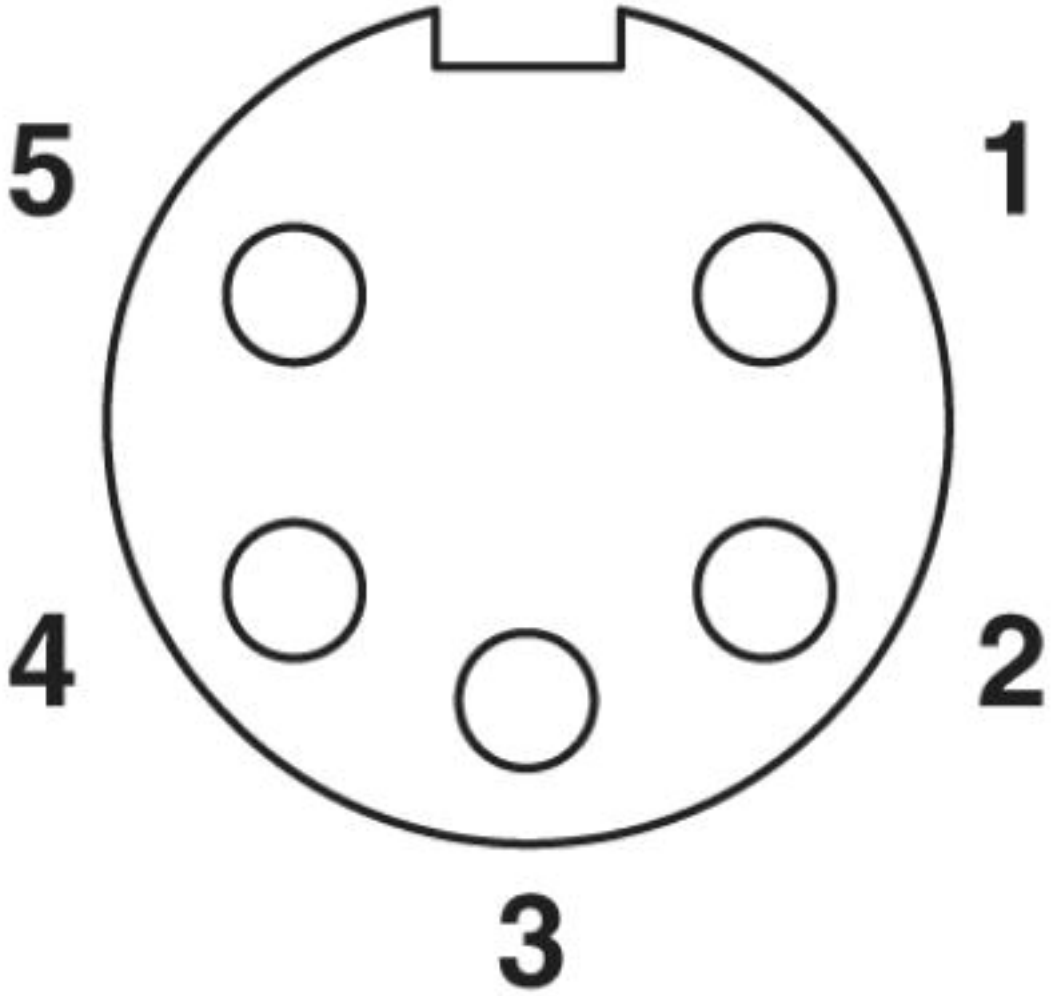

Pin assignment, socket, 7/8"-16UNF, 5-pos., view of female side

© Phoenix Contact 2013 - all rights reserved
http://www.phoenixcontact.com