# Bus system connector - SACC-M12MS-5CON-PG 9 SH AU - 1508352

Please be informed that the data shown in this PDF Document is generated from our Online Catalog. Please find the complete data in the user's documentation. Our General Terms of Use for Downloads are valid (http://download.phoenixcontact.com)



Bus system connector, male, straight, 5-pos., M12, shielded, gold-plated contacts, A-coded, screw connection, metal knurl, cable screw connection Pg9

## Product Features

- Safe use in the field, thanks to a high degree of protection
- Flexible: connectors for on-site assembly
- Screw connection: proven connection technology for a large selection of different conductors
- Reliable signal transmission - 360° shielding in environments with electromagnetic interference

## Key commercial data

| | |
|---|---|
| **package_quantity** | 1 |
| **GTIN** | 4017918900465 |

## Technical data

### Dimensions

| | |
|---|---|
| **External diameter** | 6 mm ... 8.5 mm |
| **Stripping length of the sheath** | 35 mm |
| **Stripping length of the individual wire** | 5 mm |

### Ambient conditions

| | |
|---|---|
| **Ambient temperature (operation)** | -40 °C ... 85 °C (Plug / socket) |
| **Degree of protection** | IP67 |

### General

| | |
|---|---|
| **Rated current at 40°C** | 4 A |
| **Rated voltage** | 60 V |
| **Number of positions** | 5 |
| **Contact resistance** | ≤ 3 mΩ |
| **Insulation resistance** | ≥ 100 MΩ |
| **Coding** | A - standard |
| **Standards/regulations** | M12 connector IEC 61076-2-101 |
| **Status display** | No |
| **Surge voltage category** | II |

# Bus system connector - SACC-M12MS-5CON-PG 9 SH AU - 1508352

## Technical data

### General

| | |
|---|---|
| **Pollution degree** | 3 |
| **Connection method** | Screw connection |
| **Conductor cross section** | 0.25 mm² ... 0.75 mm² |
| **AWG conductor cross section** | 24 ... 18 |
| **Insertion/withdrawal cycles** | ≥ 100 |
| **Torque** | 0.4 Nm (M12 knurl) |
| **Torque** | 0.2 Nm (Screw terminal blocks) |
| **Torque** | 0.8 Nm ... 1 Nm (Pressure screw for outer cable diameter 4 mm ... 8 mm) |
| **Torque** | 1 Nm ... 1.4 Nm (Pressure screw for outer cable diameter 8 mm ... 12 mm) |
| **Tightening torque** | Screw plug insert with sleeve housing as far it will go |
| **Assembly instructions** | The wires can be connected both with ferrules and without ferrules |

### Material

| | |
|---|---|
| **Inflammability class according to UL 94** | HB |
| **Contact material** | CuZn |
| **Contact surface material** | Au |
| **Contact carrier material** | PA 66 |
| **Material of grip body** | Zinc die-cast, nickel-plated |
| **Material, knurls** | Nickel-plated brass |
| **Sealing material** | NBR |

## classifications

### eCl@ss

| | |
|---|---|
| **eCl@ss 4.0** | 27140815 |
| **eCl@ss 4.1** | 27140815 |
| **eCl@ss 5.0** | 27260701 |
| **eCl@ss 5.1** | 27260701 |
| **eCl@ss 6.0** | 27279221 |
| **eCl@ss 7.0** | 27440104 |
| **eCl@ss 8.0** | 27440104 |

### ETIM

| | |
|---|---|
| **ETIM 2.0** | EC001121 |
| **ETIM 3.0** | EC002062 |
| **ETIM 4.0** | EC002062 |
| **ETIM 5.0** | EC002062 |

### UNSPSC

| | |
|---|---|
| **UNSPSC 6.01** | 31251501 |
| **UNSPSC 7.0901** | 31251501 |

# Bus system connector - SACC-M12MS-5CON-PG 9 SH AU - 1508352

## classifications

UNSPSC

| | |
|---|---|
| **UNSPSC 11** | 31251501 |
| **UNSPSC 12.01** | 31251501 |
| **UNSPSC 13.2** | 31251501 |

## approvals

GOST /

Approval details

GOST

## accessories

**Torque tool**

TSD 04 SAC - 1208429



TSD-M 1,2NM - 1212224



**Screwdriver tools**

SACC BIT M12-D20 - 1208445



# Bus system connector - SACC-M12MS-5CON-PG 9 SH AU - 1508352

## accessories

TSD-M SAC-BIT ADAPTER - 1212600



**Protective cap**

PROT-M12 FS-PA-CHAIN - 1430873



## Drawings

# Bus system connector - SACC-M12MS-5CON-PG 9 SH AU - 1508352

Functional drawing

**Assembly steps for M 12 male/female connector and conductor**

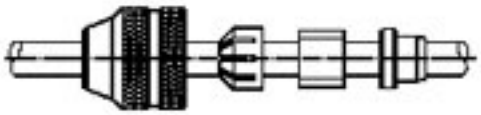

**Slide parts onto the conductor**

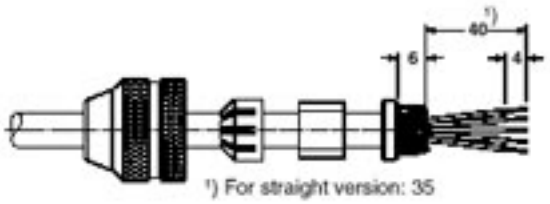


1) For straight version: 35

**Strip conductor, widen shield and lay around the shielding ring, cut off projecting mesh.**

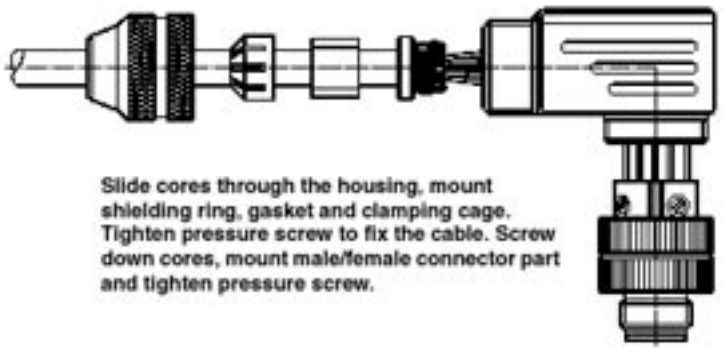

**Slide cores through the housing, mount shielding ring, gasket and clamping cage. Tighten pressure screw to fix the cable. Screw down cores, mount male/female connector part and tighten pressure screw.**

# Bus system connector - SACC-M12MS-5CON-PG 9 SH AU - 1508352

Dimensioned drawing

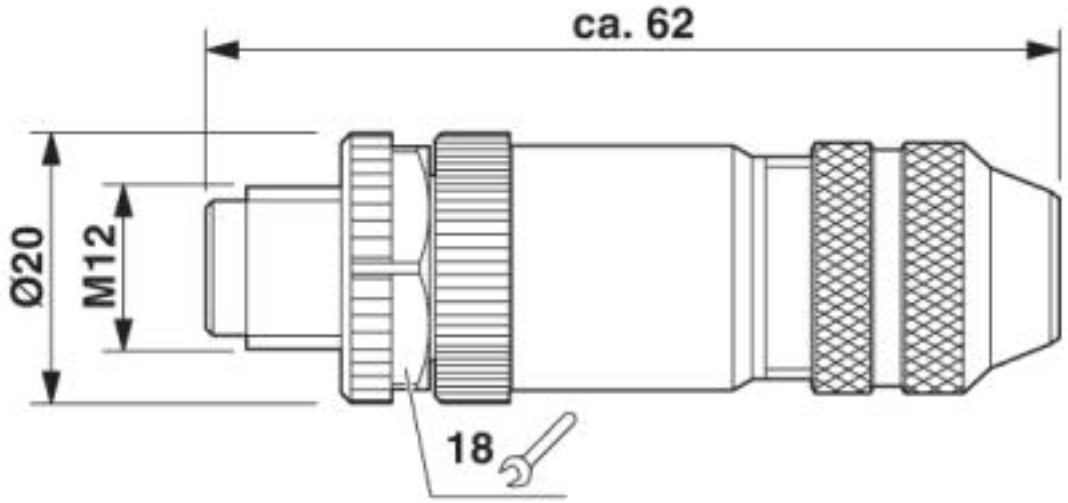


Plug, M12 x 1, straight, shielded

# Bus system connector - SACC-M12MS-5CON-PG 9 SH AU - 1508352

Schematic diagram

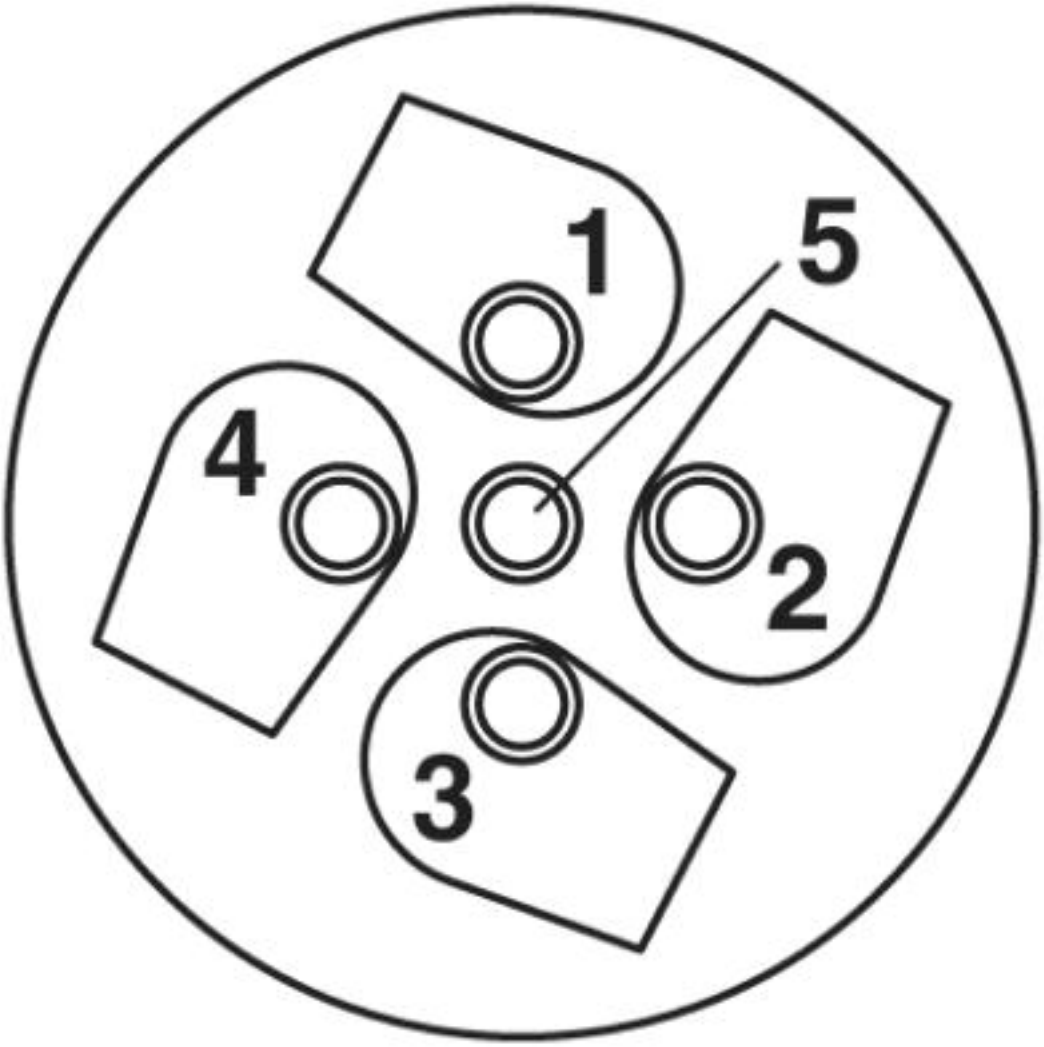


Cable connection side M12 (screw connection)

# Bus system connector - SACC-M12MS-5CON-PG 9 SH AU - 1508352

Schematic diagram

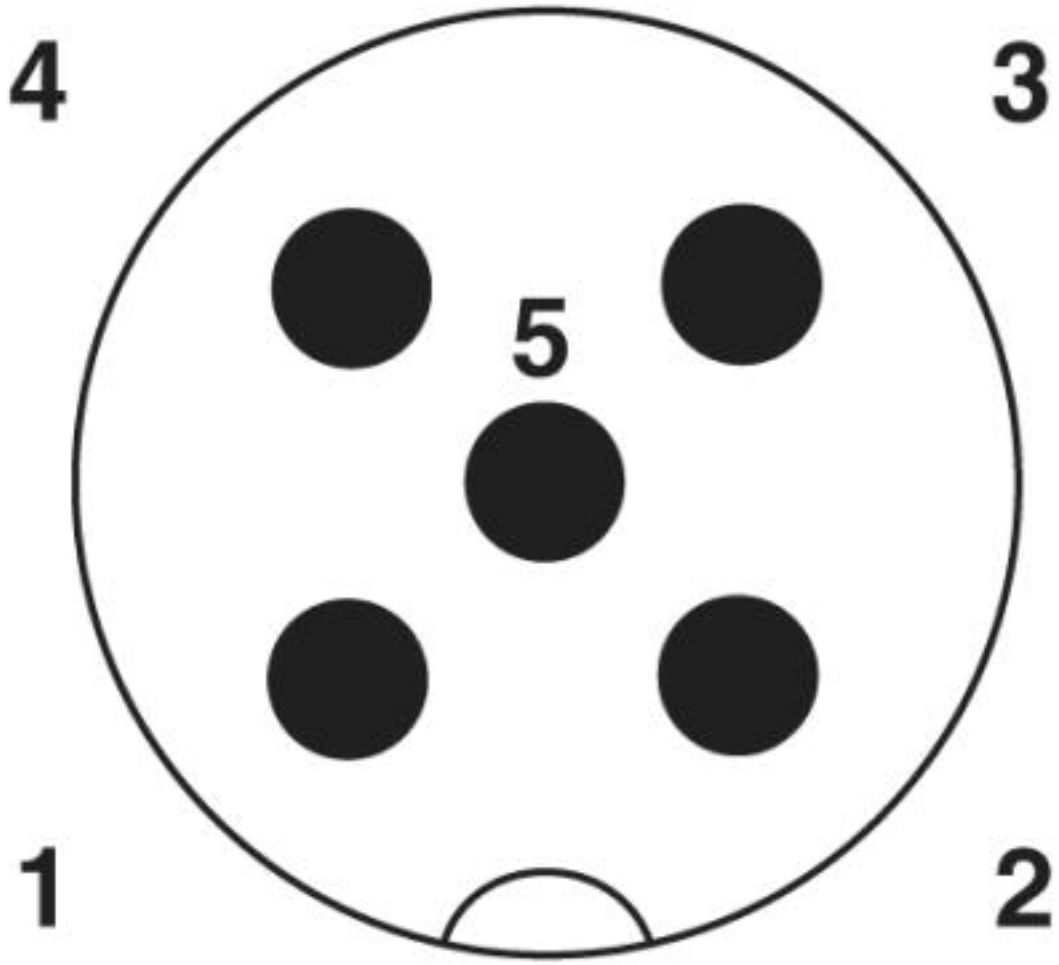


Pin assignment M12 male connector, 5-pos., A-coded, male side

© Phoenix Contact 2013 - all rights reserved
http://www.phoenixcontact.com