Conductor connectors - Q 1,5/3IDC/13-13KU-KU - 1670248

Please be informed that the data shown in this PDF Document is generated from our Online Catalog. Please find the complete data in the user's documentation. Our General Terms of Use for Downloads are valid (http://download.phoenixcontact.com)



Conductor connectors to connect circular conductors.

Key commercial data

package_quantity	1
GTIN	4017918146504

Technical data

General

Connection	If the conductor is reconnected, it must be cut off above the last contact point. QUICKON components may only be operated when under no load.
Color	green
Number of positions	3
Wrench size, union nut	24 mm
Tightening torque, union nut	2.5 Nm
Wrench size, contact carrier	24 mm
Number of connections	3
Conductor cross section stranded min.	0.75 mm²
Conductor cross section stranded max.	1.5 mm²
Conductor cross section AWG/kcmil min.	18
Conductor cross section AWG/kcmil max	16

Conductor

Structure of individual litz in acc. with VDE 0295 / smallest wire diameter	VDE 0295 Cl.2-5, min. wire diameter 0.2 mm
Wire insulation material	PVC/PE
Wire diameter including insulation	>= 3 mm

Ambient conditions

Degree of protection	IP65
Degree of protection	IP67
Ambient temperature (operation)	-25 °C ... 80 °C
Ambient temperature (operation)	-25 °C ... 50 °C (when the conductor is connected. Specifications of the cable manufacturer must also be observed.)

Electrical characteristics

Conductor connectors - Q 1,5/3IDC/13-13KU-KU - 1670248

Technical data

Electrical characteristics

Nominal current I_N	17.5 A
Rated voltage (III/3)	250 V
Rated voltage (III/2)	320 V
Rated voltage (II/2)	630 V

Mechanical characteristics

QUICKON connectability	10 (if the conductor is connected more than once, seal and cap may need to be replaced.)

Material data

Contact material	Copper alloy
Contact surface material	Pre-nickel plated and tin-plated
Contact carrier material	PA 66
Inflammability class according to UL 94	V0
Surge voltage category	III
Pollution degree	3

classifications

eCl@ss

eCl@ss 4.0	27140815
eCl@ss 4.1	27140815
eCl@ss 5.0	27143423
eCl@ss 5.1	27143423
eCl@ss 6.0	27143423
eCl@ss 7.0	27449001
eCl@ss 8.0	27449001

ETIM

ETIM 2.0	EC000516
ETIM 3.0	EC000516
ETIM 4.0	EC000516
ETIM 5.0	EC000516

UNSPSC

UNSPSC 6.01	30211923
UNSPSC 7.0901	39121522
UNSPSC 11	39121522
UNSPSC 12.01	39121522
UNSPSC 13.2	39121522

approvals

UL Recognized / cUL Recognized / GOST / cULus Recognized /

Conductor connectors - Q 1,5/3IDC/13-13KU-KU - 1670248

approvals

Approval details

UL Recognized

Nominal voltage UN	250 V
Nominal current IN	15 A
mm²/AWG/kcmil	

cUL Recognized

Nominal voltage UN	250 V
Nominal current IN	11 A
mm²/AWG/kcmil	

GOST

cULus Recognized

accessories

Pressure nut

Q-SMU PG13,5 SET COD2 - 1670963



Protective cap

Conductor connectors - Q 1,5/3IDC/13-13KU-KU - 1670248

accessories

Q-PROT13/16 - 1670222



accessories

Q-SMU PG13,5 SET - 1670756



Drawings

Dimensioned drawing

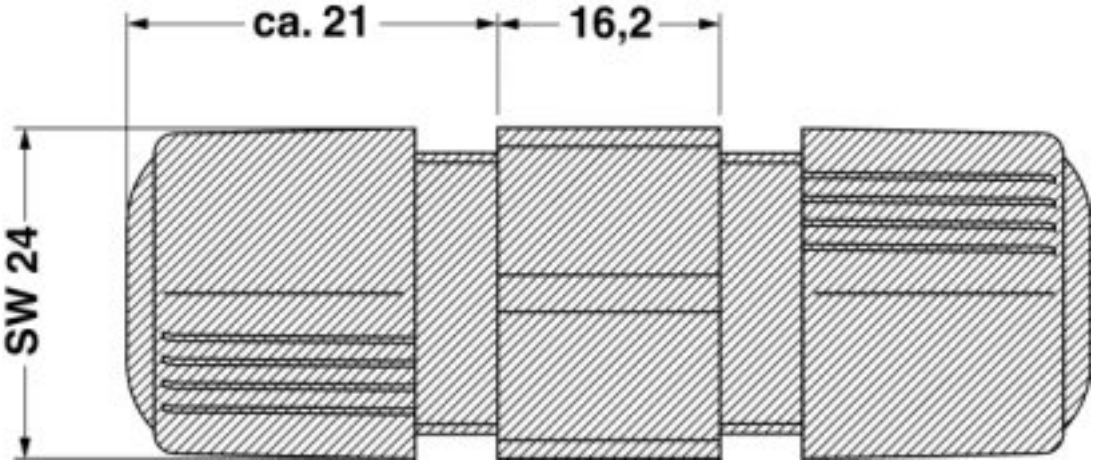

© Phoenix Contact 2013 - all rights reserved
http://www.phoenixcontact.com