Bus system cable - SAC-5P-M12MS/ 8,0-920/M12FS - 1514333

Please be informed that the data shown in this PDF Document is generated from our Online Catalog. Please find the complete data in the user's documentation. Our General Terms of Use for Downloads are valid (http://download.phoenixcontact.com)



Bus system cable, CANopen®, DeviceNet™, CANopen®/DeviceNet™, 5-position, PUR halogen-free, Violet, RAL 4001, shielded, Plug straight M12, A-coded, on Socket straight M12, A-coded, Cable length: 8 m

Key commercial data

package_quantity	1
GTIN	4017918936242

Technical data

Dimensions

Length of cable	8 m

Ambient conditions

Degree of protection	IP65
Degree of protection	IP67
Degree of protection	IP68

General

Rated current at 40°C	4 A
Rated voltage	60 V
Number of positions	5
Contact resistance	≤ 5 mΩ
Insulation resistance	≥ 100 MΩ
Coding	A - standard
Signal type/category	CANopen®
Signal type/category	DeviceNet™
Status display	No
Surge voltage category	II
Pollution degree	3
Insertion/withdrawal cycles	≥ 100

Material

Inflammability class according to UL 94	HB
Contact material	CuSn
Contact surface material	Ni/Au

Bus system cable - SAC-5P-M12MS/ 8,0-920/M12FS - 1514333

Technical data

Material

Contact carrier material	TPU GF
Material of grip body	TPU, hardly inflammable, self-extinguishing
Material, knurls	Zinc die-cast, nickel-plated
Sealing material	NBR

Cable

Cable type	CAN Bus/DeviceNet
Cable type (abbreviation)	920
Conductor cross section	2x 0.25 mm² (signal line)
Conductor cross section	2x 0.34 mm² (Power supply)
Conductor cross section	1x 0.34 mm² (Drain wire)
AWG signal line	24
AWG power supply	22
Conductor structure signal line	19x 0.13 mm
Conductor structure, voltage supply	19x 0.15 mm
Core diameter including insulation	1.95 mm ±0.05 mm (signal line)
Core diameter including insulation	1.4 mm ±0.05 mm (Power supply)
Wire colors	Red-black, blue-white
Twisted pairs	2 cores to the pair
Type of pair shielding	Aluminum-lined polyester foil
Overall twist	2 pairs around a drain wire in the center to the core
Shielding	Tinned copper braided shield
Optical shield covering	80 %
External sheath, color	Violet, RAL 4001
External cable diameter D	6.7 mm ±0.3 mm
Smallest bending radius, fixed installation	67 mm
Smallest bending radius, movable installation	67 mm
Number of bending cycles	2000000
Bending radius	67 mm
Traversing path	4.5 m
Traversing rate	3 m/s
Acceleration	3 m/s²
Outer sheath, material	PUR
Material conductor insulation	Foamed PE (signal line)
Material conductor insulation	PE (Power supply)
Conductor material	Tin-plated Cu litz wires
Insulation resistance	≥ 5 GΩ*km (signal line)
Insulation resistance	≥ 5 GΩ*km (Power supply)
Working capacitance	nom. 40 nF (signal line)
Wave impedance	120 Ω ± 12 Ω (with 1 MHz)
Nominal voltage, cable	max. 300 V
Test voltage, cable	2000 V (50 Hz, 1 min.)

Bus system cable - SAC-5P-M12MS/ 8,0-920/M12FS - 1514333

Technical data

Cable

Flame resistance	UL 1581, Sec. 1060 (FT-1)
Flame resistance	IEC 60332-1
Ambient temperature (operation)	-40 °C ... 80 °C (cable, fixed installation)
Ambient temperature (operation)	-20 °C ... 70 °C (cable, flexible installation)

classifications

eCl@ss

eCl@ss 4.0	27060306
eCl@ss 4.1	27060306
eCl@ss 5.0	27061801
eCl@ss 5.1	27061801
eCl@ss 6.0	27061801
eCl@ss 7.0	27061801
eCl@ss 8.0	27061801

ETIM

ETIM 2.0	EC000830
ETIM 3.0	EC001855
ETIM 4.0	EC001855
ETIM 5.0	EC001855

UNSPSC

UNSPSC 6.01	31251501
UNSPSC 7.0901	31251501
UNSPSC 11	31251501
UNSPSC 12.01	31251501
UNSPSC 13.2	31251501

Drawings

Bus system cable - SAC-5P-M12MS/ 8,0-920/M12FS - 1514333

Dimensioned drawing

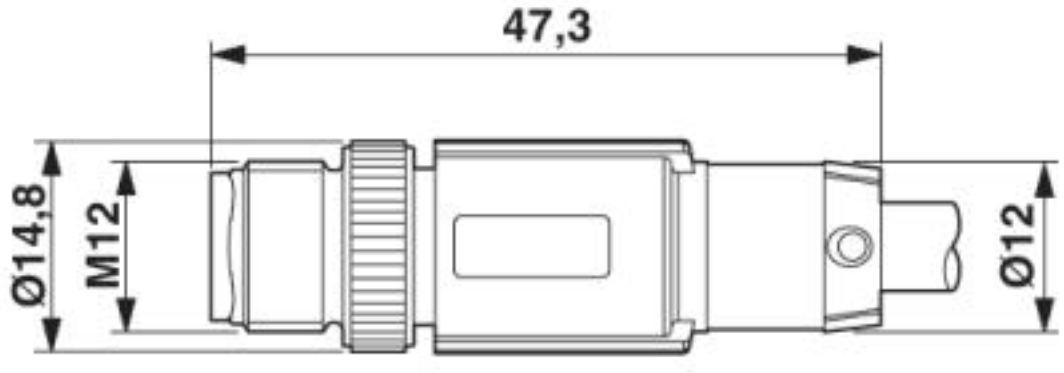

Plug, M12 x 1, straight, shielded

Dimensioned drawing

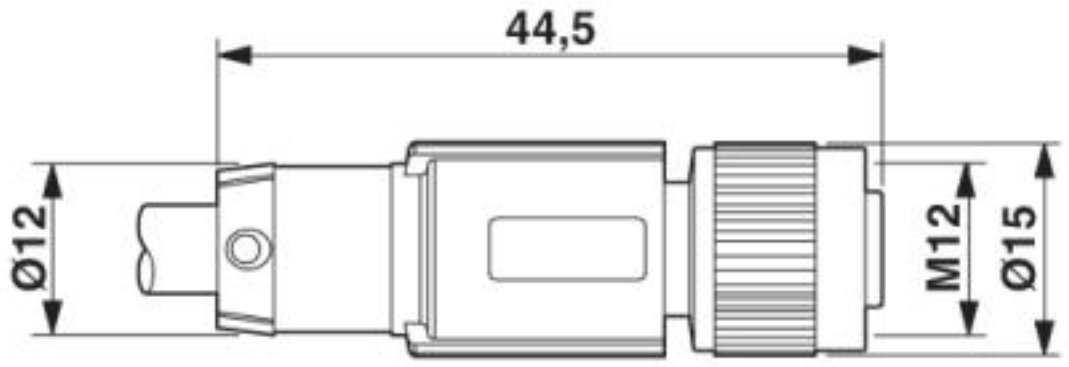

M12 x 1 socket, straight, shielded

Circuit diagram

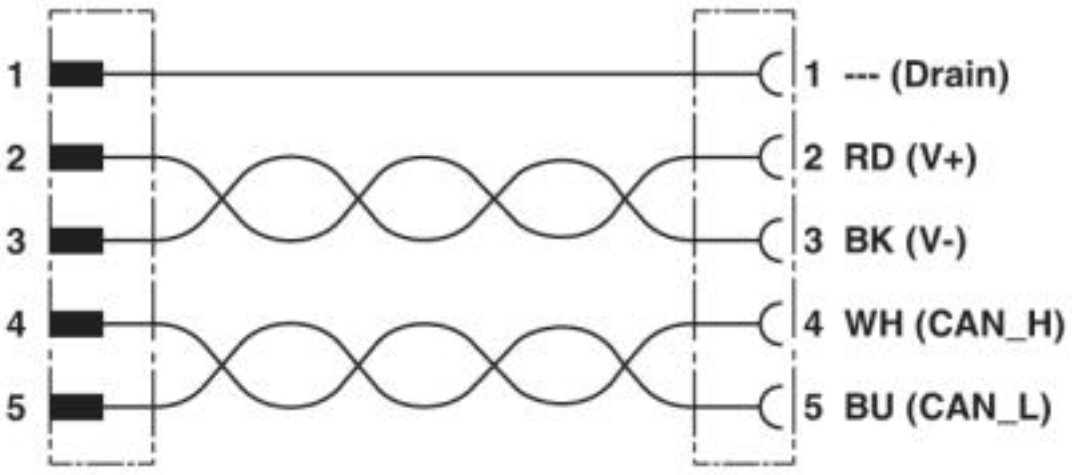

Contact assignment of the M12 connector and the M12 socket

Bus system cable - SAC-5P-M12MS/ 8,0-920/M12FS - 1514333

Schematic diagram

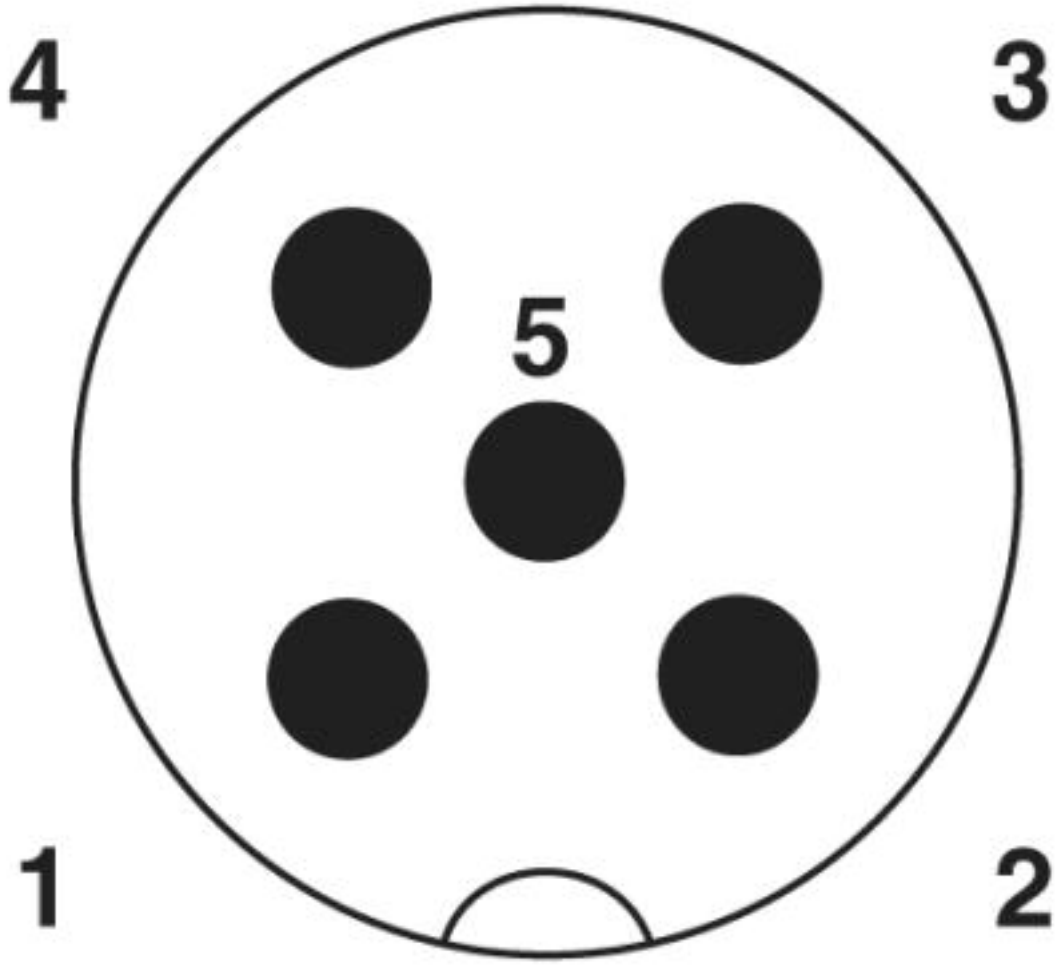

Pin assignment M12 male connector, 5-pos., A-coded, male side

Bus system cable - SAC-5P-M12MS/ 8,0-920/M12FS - 1514333

Schematic diagram

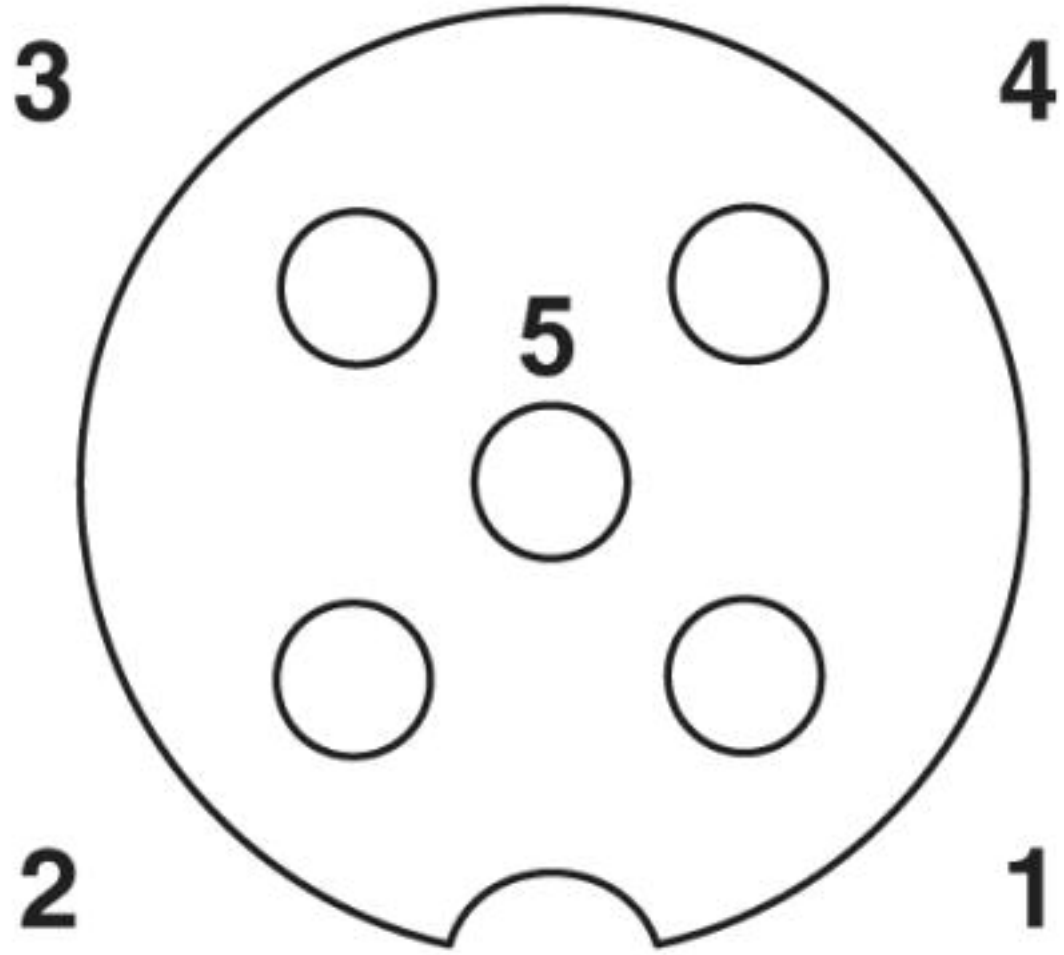

Pin assignment M12 socket, 5-pos., A-coded, socket side view

Bus system cable - SAC-5P-M12MS/ 8,0-920/M12FS - 1514333

Cable cross section



CAN Bus/DeviceNet [920]

© Phoenix Contact 2013 - all rights reserved
http://www.phoenixcontact.com