Flush-type connector - SACC-DSI-MS-12CON-PG9/0,5 SCO - 1430459

Please be informed that the data shown in this PDF Document is generated from our Online Catalog. Please find the complete data in the user's documentation. Our General Terms of Use for Downloads are valid (http://download.phoenixcontact.com)



Sensor/actuator flush-type plug, 12-pos., M12 SPEEDCON, rear/screw mounting with Pg9 thread, with 0.5 m halogen-free TPE litz wire, 12 x 0.14 mm²

Key commercial data

package_quantity	1
GTIN	4046356325813

Technical data

Dimensions

Length of cable	0.5 m

Ambient conditions

Ambient temperature (operation)	-25 °C ... 85 °C (Plug / socket)
Degree of protection	IP67

General

Rated current at 40°C	1.5 A
Rated voltage	30 V
Number of positions	12
Contact resistance	≤ 3 mΩ
Insulation resistance	≥ 100 MΩ
Coding	A - standard
Standards/regulations	M12 connector IEC 61076-2-101
Status display	No
Surge voltage category	II
Pollution degree	3
Connection method	Individual wires
Mounting type	Rear mounting Pg9 With flat nut

Material

Inflammability class according to UL 94	V0
Contact material	CuZn

Flush-type connector - SACC-DSI-MS-12CON-PG9/0,5 SCO - 1430459

Technical data

Material

Contact surface material	Au
Contact carrier material	PA 66
Material, knurls	Zinc die-cast, nickel-plated
Sealing material	NBR

Cable

Cable type	TPE litz wire
Conductor cross section	0.14 mm²
AWG signal line	26
Wire colors	Color-coded DIN 47100
Material conductor insulation	TPE
Conductor material	Tin-plated Cu litz wires
Ambient temperature (operation)	-25 °C ... 85 °C (cable, fixed installation)

classifications

eCl@ss

eCl@ss 4.0	27250313
eCl@ss 4.1	27250313
eCl@ss 5.0	27143423
eCl@ss 5.1	27143423
eCl@ss 6.0	27143423
eCl@ss 7.0	27449001
eCl@ss 8.0	27449001

ETIM

ETIM 3.0	EC002061
ETIM 4.0	EC002061
ETIM 5.0	EC002061

UNSPSC

UNSPSC 6.01	31251501
UNSPSC 7.0901	31251501
UNSPSC 11	31251501
UNSPSC 12.01	31251501
UNSPSC 13.2	31251501

approvals

UL Recognized / GOST / GOST /

Flush-type connector - SACC-DSI-MS-12CON-PG9/0,5 SCO - 1430459

approvals

Approval details

UL Recognized

Nominal voltage UN	30 V
Nominal current IN	1.5 A
mm²/AWG/kcmil	26-20

GOST

Drawings

Dimensioned drawing

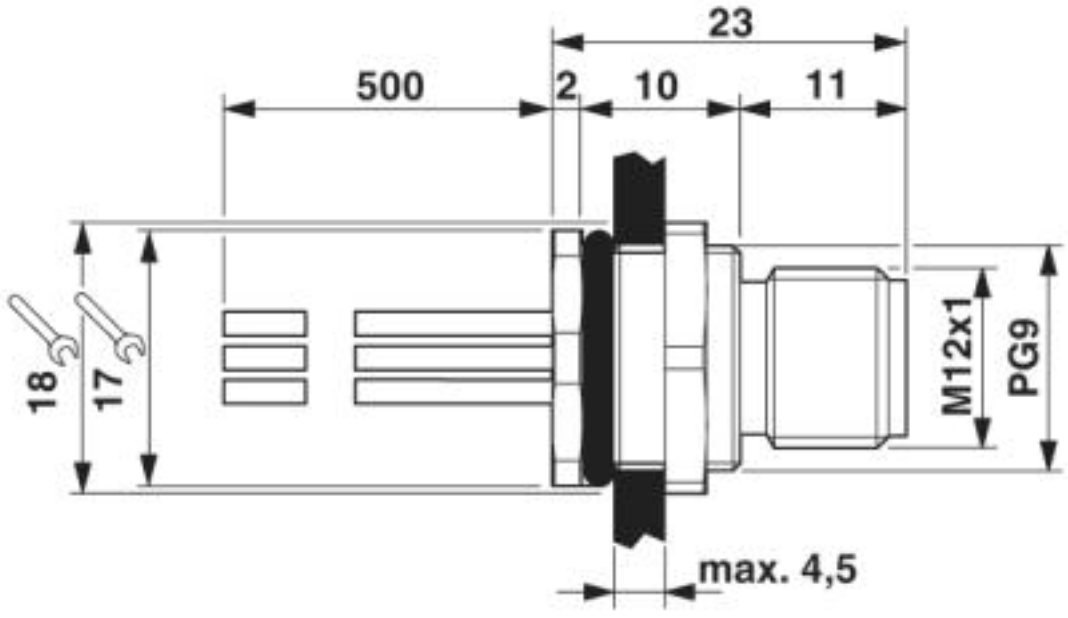

M12 flush-type connector

Flush-type connector - SACC-DSI-MS-12CON-PG9/0,5 SCO - 1430459

Dimensioned drawing

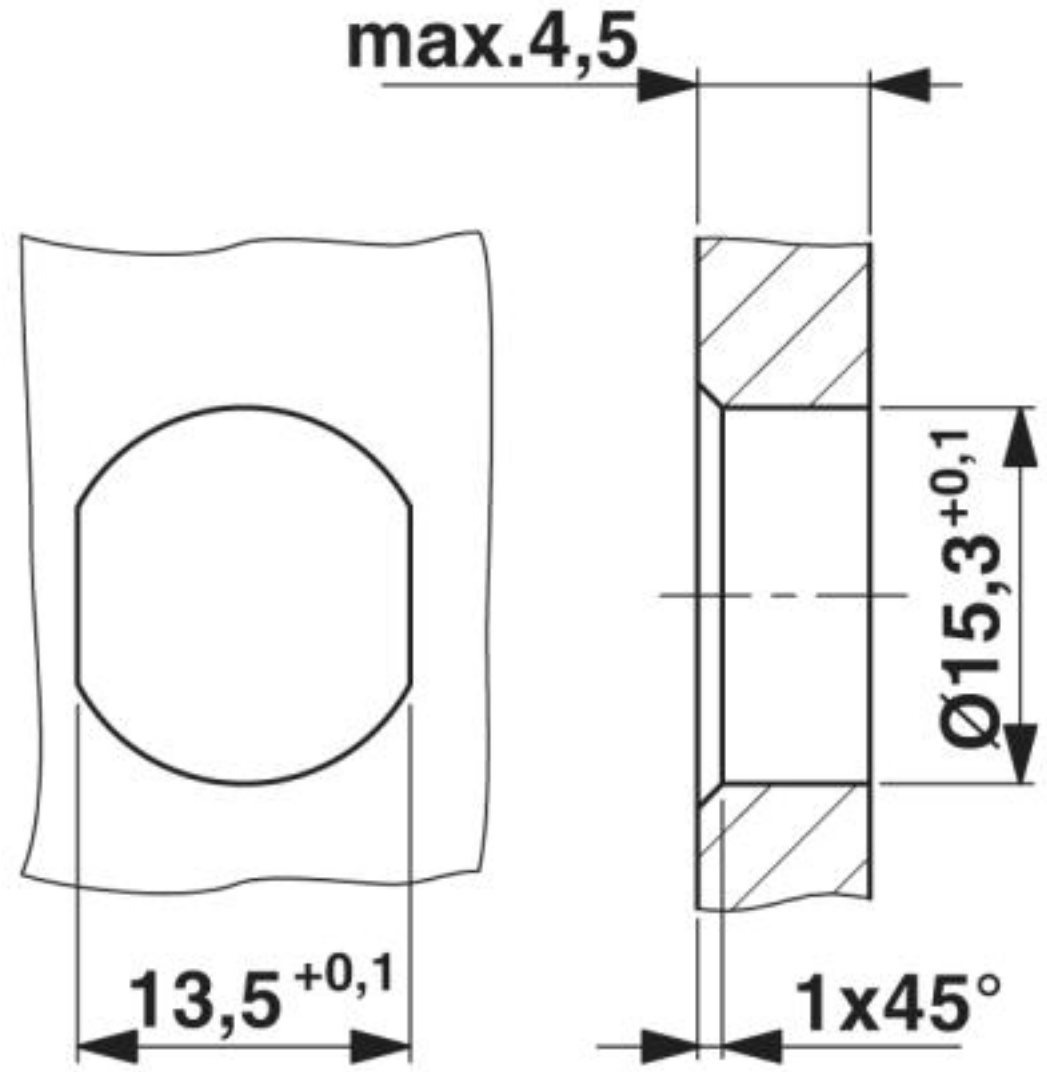

Housing cutout for Pg9 fastening thread, mounting panel with feed-through hole (alternatively with surface as protection against rotation)

Flush-type connector - SACC-DSI-MS-12CON-PG9/0,5 SCO - 1430459

Circuit diagram

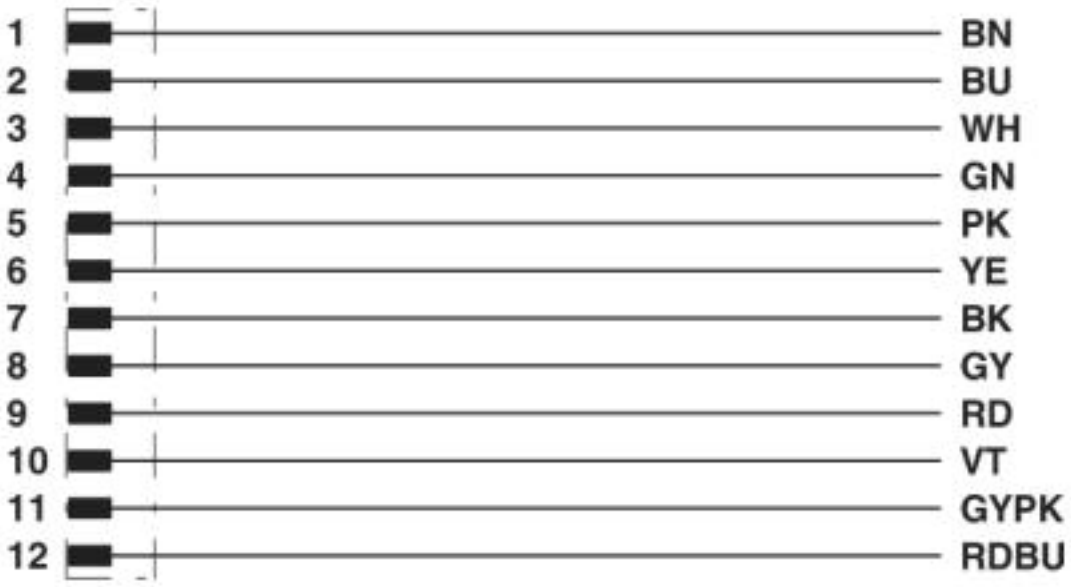

Contact assignment of the M12 plug

Flush-type connector - SACC-DSI-MS-12CON-PG9/0,5 SCO - 1430459

Schematic diagram

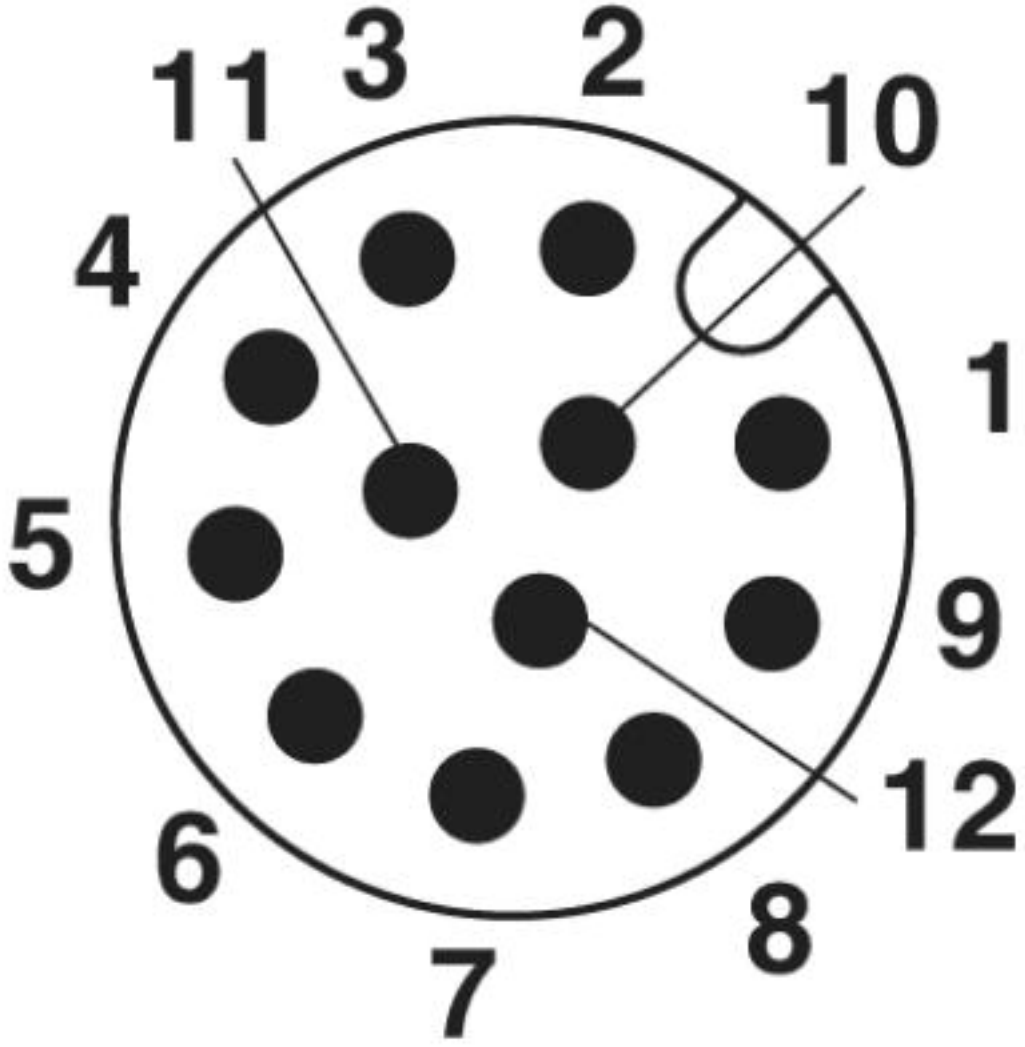

Pin assignment M12 male connector, 12-pos., male side view

© Phoenix Contact 2013 - all rights reserved
http://www.phoenixcontact.com