Sensor/Actuator cable - SAC-5P-M12MS/ 0,6-PUR/M12FS SH - 1500897

Please be informed that the data shown in this PDF Document is generated from our Online Catalog. Please find the complete data in the user's documentation. Our General Terms of Use for Downloads are valid (http://download.phoenixcontact.com)



Sensor/Actuator cable, 5-position, PUR halogen-free, Black-gray RAL 7021, shielded, Plug straight M12, A-coded, on Socket straight M12, A-coded, Cable length: 0.6 m

Product Features

- Easy and safe: 100% electrically tested plug-in components
- Our standard: robust halogen-free PUR cable
- Reliable signal transmission – 360° shielding in environments with electromagnetic interference

Key commercial data

package_quantity	1
GTIN	4017918618148

Technical data

Dimensions

Length of cable	0.6 m

Ambient conditions

Ambient temperature (operation)	-25 °C ... 90 °C (Plug / socket)
Degree of protection	IP65
Degree of protection	IP67

General

Rated current at 40°C	4 A
Rated voltage	60 V
Number of positions	5
Contact resistance	≤ 5 mΩ
Insulation resistance	≥ 100 MΩ
Coding	A - standard
Standards/regulations	M12 connector IEC 61076-2-101
Status display	No
Protective circuit/component	Unwired
Surge voltage category	II
Pollution degree	3
Insertion/withdrawal cycles	≥ 100

Sensor/Actuator cable - SAC-5P-M12MS/ 0,6-PUR/M12FS SH - 1500897

Technical data

General

Torque	0.4 Nm (M12 connector)

Material

Inflammability class according to UL 94	HB
Contact material	CuSn
Contact surface material	Ni/Au
Contact carrier material	TPU GF
Material of grip body	TPU, hardly inflammable, self-extinguishing
Material, knurls	Zinc die-cast, nickel-plated
Sealing material	NBR

Cable

Cable type	PUR halogen-free black shielded
Cable type (abbreviation)	PUR
Cable abbreviation	LiF9YC11Y
UL AWM style	20549
Conductor cross section	5x 0.34 mm² (signal line)
AWG signal line	22
Conductor structure signal line	42x 0.10 mm
Core diameter including insulation	1.27 mm ±0.02 mm (signal line)
Wire colors	Brown, white, blue, black, gray
Overall twist	5 wires around filler to the core
Shielding	Tinned copper braided shield
Optical shield covering	85 %
External sheath, color	Black RAL 9005
External cable diameter D	5.9 mm ± 0.2 mm
Smallest bending radius, fixed installation	29.5 mm
Smallest bending radius, movable installation	59 mm (Up to +60°C)
Number of bending cycles	4000000
Bending radius	59 mm
Traversing path	10 m
Traversing rate	3 m/s
Acceleration	10 m/s²
Outer sheath, material	PUR
Material conductor insulation	PP
Conductor material	Bare Cu litz wires
Insulation resistance	70 GΩ*km (at 20 °C)
Conductor resistance	max. 57 Ω/km (at 20 °C)
Nominal voltage, cable	300 V (at 20 °C)
Test voltage Core/Core	3000 V (at 20 °C)
Special properties	Flexible cable conduit capable

Sensor/Actuator cable - SAC-5P-M12MS/ 0,6-PUR/M12FS SH - 1500897

Technical data

Cable

Flame resistance	In accordance with UL FT-2
Halogen-free	in accordance with DIN VDE 0472 part 815
Other resistance	hydrolysis and microbe resistant
Other resistance	partly UV-resistant in accordance with DIN EN ISO 4892-2-A
Ambient temperature (operation)	-40 °C ... 80 °C (cable, fixed installation)
Ambient temperature (operation)	-25 °C ... 80 °C (cable, flexible installation)

classifications

eCl@ss

eCl@ss 4.0	27060306
eCl@ss 4.1	27060306
eCl@ss 5.0	27061801
eCl@ss 5.1	27061801
eCl@ss 6.0	27061801
eCl@ss 7.0	27061801
eCl@ss 8.0	27061801

ETIM

ETIM 2.0	EC000830
ETIM 3.0	EC001855
ETIM 4.0	EC001855
ETIM 5.0	EC001855

UNSPSC

UNSPSC 6.01	31251501
UNSPSC 7.0901	31251501
UNSPSC 11	31251501
UNSPSC 12.01	31251501
UNSPSC 13.2	31251501

approvals

UL Listed / cUL Listed / GOST / GOST / cULus Listed /

Approval details

UL Listed

Sensor/Actuator cable - SAC-5P-M12MS/ 0,6-PUR/M12FS SH - 1500897

approvals

Nominal voltage UN	125 V
Nominal current IN	4 A
mm²/AWG/kcmil	

cUL Listed

Nominal voltage UN	125 V
Nominal current IN	4 A
mm²/AWG/kcmil	

GOST

cULus Listed

accessories

Protective cap

PROT-M12 FS-PA-CHAIN - 1430873



PROT-M12 MS-PA-CHAIN - 1430899



Sensor/Actuator cable - SAC-5P-M12MS/ 0,6-PUR/M12FS SH - 1500897

accessories

Safety locking

SAC-M12-EXCLIP-M - 1558988



SAC-M12-EXCLIP-F - 1558991



Conductor marking

PABA WH/15 - 1013151



PABA YE/15 - 1013698



PABA RD/15 - 1013944



Sensor/Actuator cable - SAC-5P-M12MS/ 0,6-PUR/M12FS SH - 1500897

accessories

Marker carrier cable

PATO 2/15 - 1013122



PATO 3/15 - 1013135



PATO 4/15 - 1013148



Marker pen

B-STIFT - 1051993



Torque tool

TSD 04 SAC - 1208429



Sensor/Actuator cable - SAC-5P-M12MS/ 0,6-PUR/M12FS SH - 1500897

accessories

TSD-M 1,2NM - 1212224



Screwdriver tools

TSD-M SAC-BIT ADAPTER - 1212600



SAC BIT M12-D15 - 1208432



Drawings

Dimensioned drawing

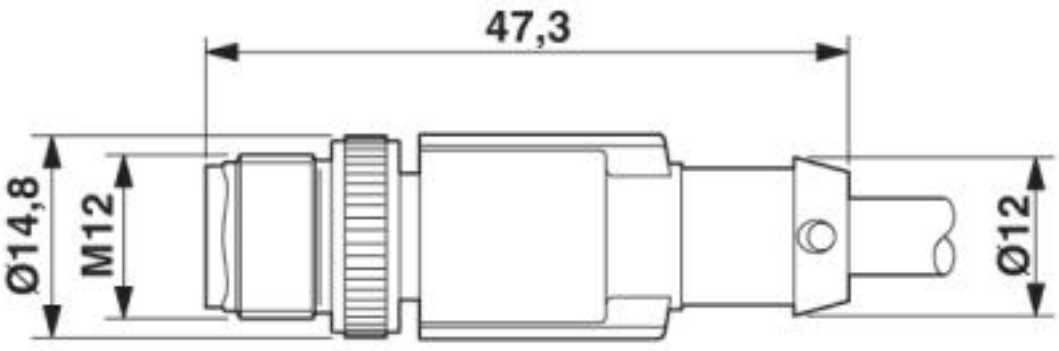

Plug, M12 x 1, straight, shielded

Sensor/Actuator cable - SAC-5P-M12MS/ 0,6-PUR/M12FS SH - 1500897

Dimensioned drawing

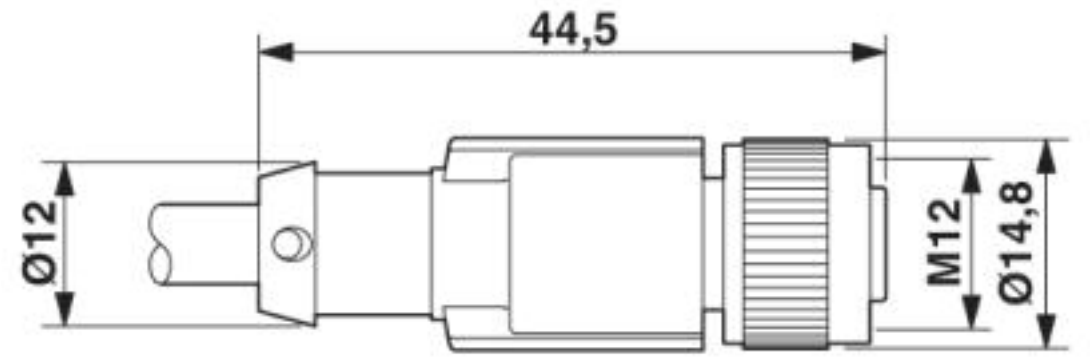

M12 x 1 socket, straight, shielded

Circuit diagram



Contact assignment of the M12 plug and the M12 socket

Sensor/Actuator cable - SAC-5P-M12MS/ 0,6-PUR/M12FS SH - 1500897

Schematic diagram

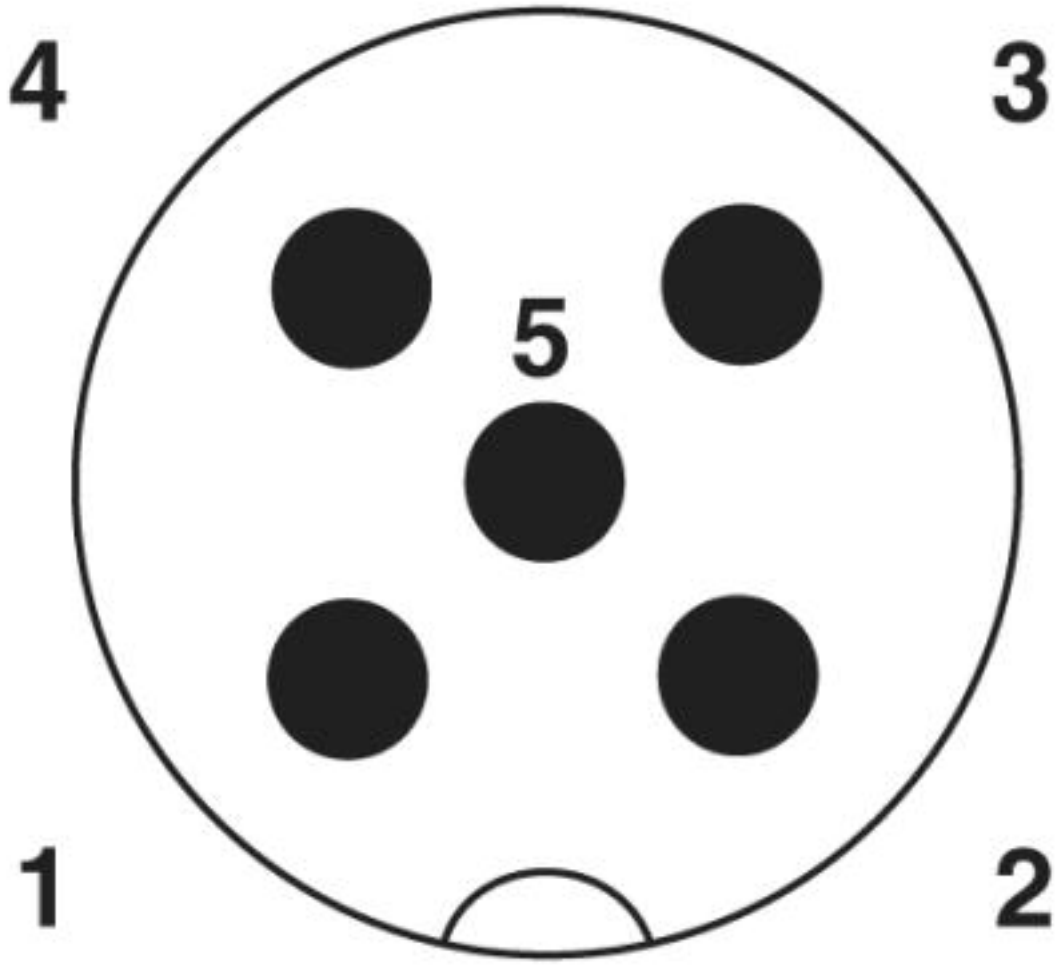

Pin assignment M12 male connector, 5-pos., A-coded, male side

Sensor/Actuator cable - SAC-5P-M12MS/ 0,6-PUR/M12FS SH - 1500897

Schematic diagram

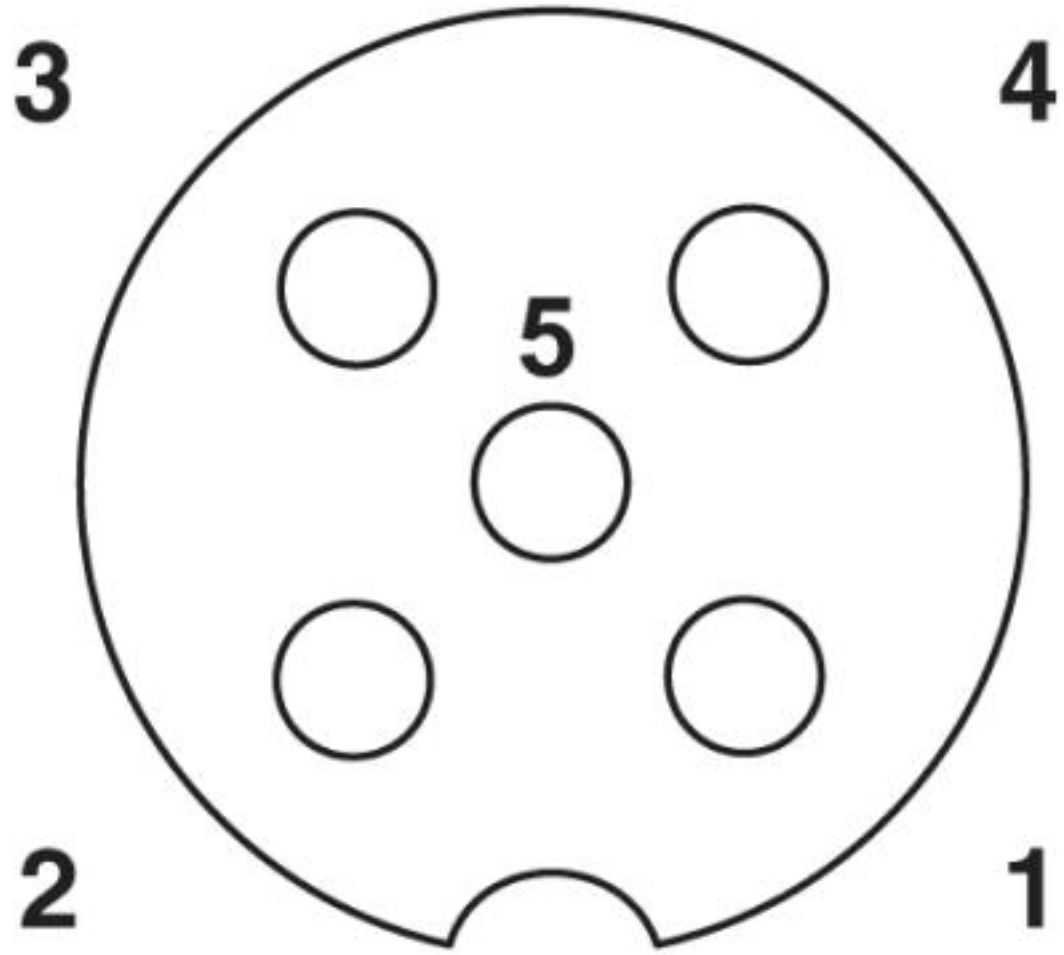

Pin assignment M12 socket, 5-pos., A-coded, socket side view

Sensor/Actuator cable - SAC-5P-M12MS/ 0,6-PUR/M12FS SH - 1500897

Cable cross section



PUR halogen-free black shielded [PUR]

© Phoenix Contact 2013 - all rights reserved
http://www.phoenixcontact.com