Description

- Circular connector for servo cables and encoders
- Low-resistance screen contact
- Optimum EMC protection
- Use of high quality materials for increased reliability
- Complete connector with housing and insulation body, equipped with suitable solder contacts



Components oft the combination

Article number of the combination	75009702
Housing	SIGNAL M23 D6 (44420037)
Insert	12 Pin (P-Part) with solder termination (73002716)

General characteristics

Series	SIGNAL M23
Type	D6, Cable connector
Version	Female
Connection type	Solder termination
Coding	Black (N)
Pin-arrangement	12 (P-Part)
Contact diameter	1 mm
Termination cross section	Up to 1 mm²
Clamping range	7,0 mm – 13,5 mm
Degree of protection	IP 68 (10 h / 1 m) (latched)
Cycles of mechanical operation	100
Temperature range	-25 °C to +125 °C

Materials and surfaces

Housing, base material	Zinc die-cast
Housing, surface	Nickel
Sealing	FPM/FKM
Insert	PA
Contact, base material	Brass
Contact, surface	Gold

Electrical characteristics

Rated voltage	100 V
Rated impulse voltage	1,5 kV
Rated current	7 A
Contact resistance	< 4 mOhm
Verschmutzungsgrad	3

We reserve all rights according to DIN ISO 16016.

Approvals

VDE-Approval, VDE-REG.-Nr.	C024
UL File Number	E249137

Standards

Safety Standard	IEC 61984; UL 1977

Technical Drawings

Housing

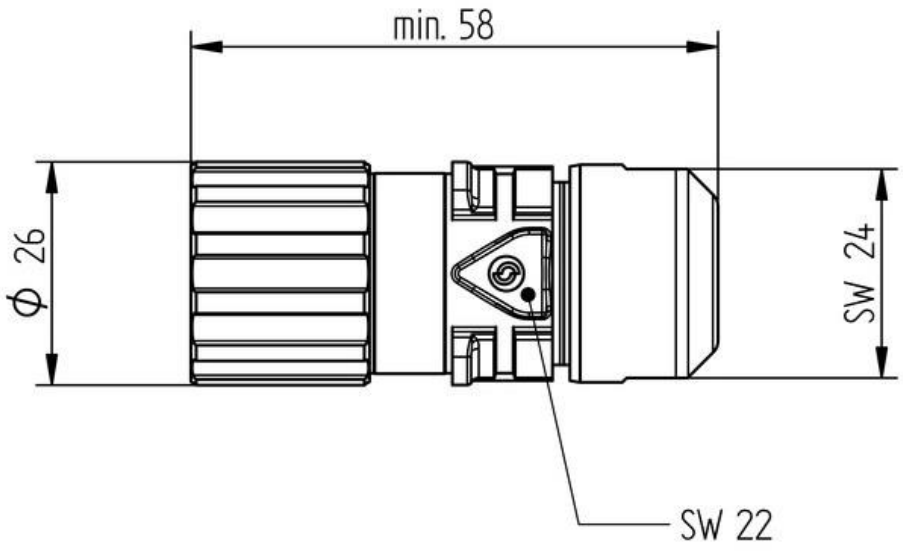

Insert

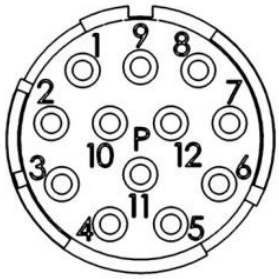

We reserve all rights according to DIN ISO 16016.


Good chemical resistance

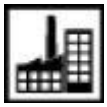
Industrial machinery and plant engineering

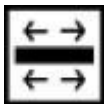
Optimum strain relief


Mechanical resistance


Assembly time


Robust

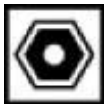
Integrated SKINTOP® cable gland


Wind energy


Variety of approval certifications

Info

Robust metal connector with integrated EMC cable gland

Application range

Plant engineering
Servo drives and Servo assemblies
Measurement and control technology
Apparatus construction

Remark

Photographs are not to scale and do not represent detailed images of the respective products.

We reserve all rights according to DIN ISO 16016.