Control cabinet feed-through - VS-BH-M12FSD-RJ45/90 - 1657261

Please be informed that the data shown in this PDF Document is generated from our Online Catalog. Please find the complete data in the user's documentation. Our General Terms of Use for Downloads are valid (http://download.phoenixcontact.com)



Control cabinet feed-through, M12, 4-pos., D-coded on RJ45 socket, socket input 90°, IP65/67

PROFINET Ethernet

Key commercial data

package_quantity	1
GTIN	4046356100083

Technical data

Mechanical characteristics

Number of positions	4
Shielded	Yes
Color	black

Ambient conditions

Ambient temperature (operation)	-25 °C ... 85 °C
Degree of protection	IP65/67

Material data

Inflammability class according to UL 94	V0
Housing material	PA
Contact material	Copper alloy

Electrical characteristics

Number of positions	4
Nominal voltage U_N	50 V
Nominal current I_N	1 A
Transmission characteristics (category)	CAT5 (IEC 11801:2002), CAT5e (TIA 568B:2001)
Rated current	1 A

classifications

eCl@ss

eCl@ss 4.0	272607xx
eCl@ss 4.1	27260701

Control cabinet feed-through - VS-BH-M12FSD-RJ45/90 - 1657261

classifications

eCl@ss

eCl@ss 5.0	27260701
eCl@ss 5.1	27060307
eCl@ss 6.0	27279220
eCl@ss 7.0	27440103
eCl@ss 8.0	27440103

ETIM

ETIM 3.0	EC002061
ETIM 4.0	EC000220
ETIM 5.0	EC000220

UNSPSC

UNSPSC 6.01	31261501
UNSPSC 7.0901	31261501
UNSPSC 11	31261501
UNSPSC 12.01	31261501
UNSPSC 13.2	31261501

approvals

GOST / GOST /

Approval details

GOST

Drawings

Explosion drawing

Control cabinet feed-through - VS-BH-M12FSD-RJ45/90 - 1657261

Dimensioned drawing

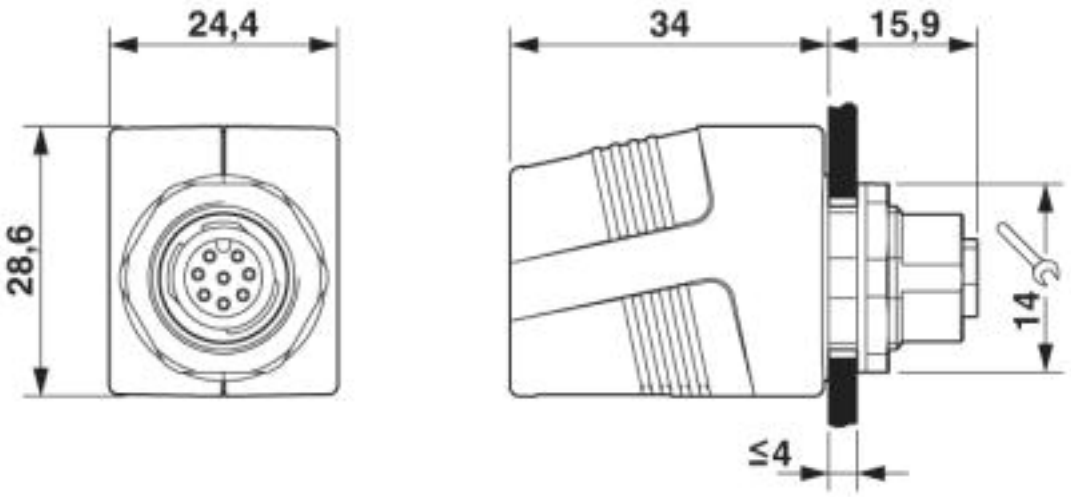

Dimensioned drawing

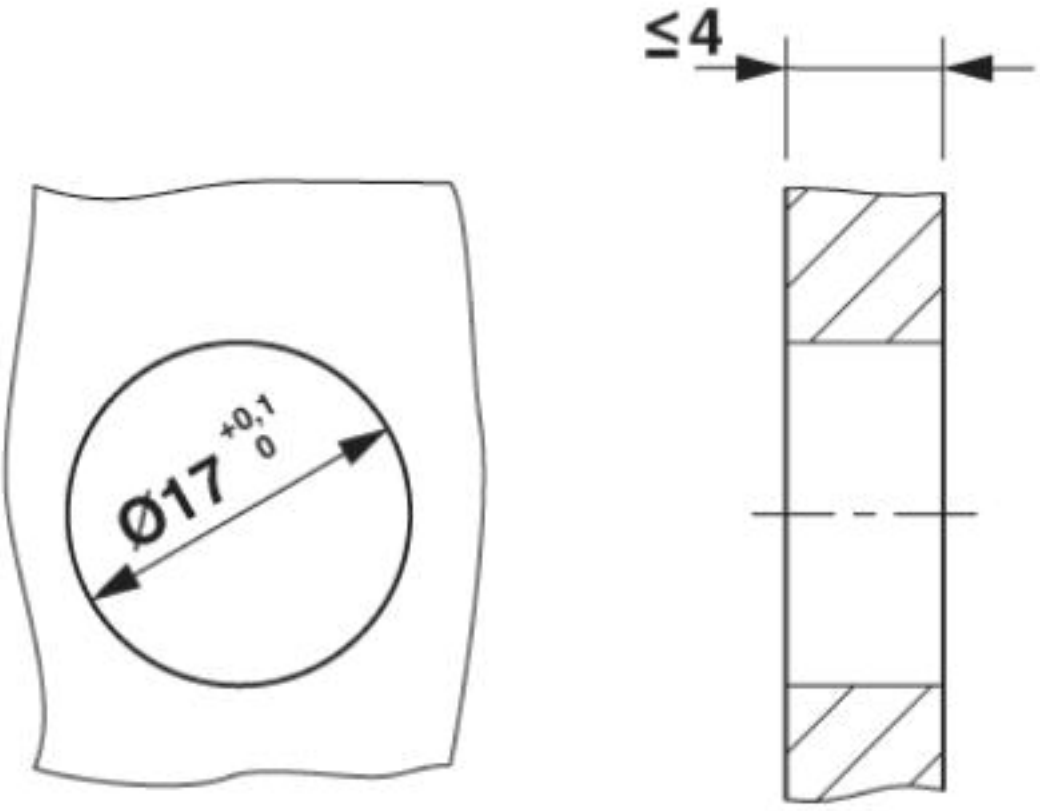

Panel cutout

Control cabinet feed-through - VS-BH-M12FSD-RJ45/90 - 1657261

Circuit diagram

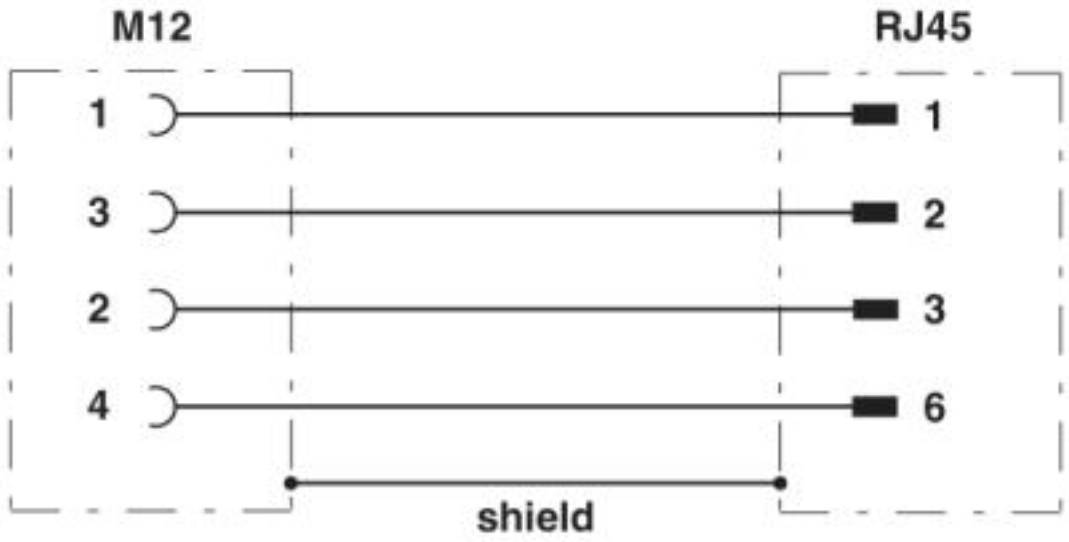

© Phoenix Contact 2013 - all rights reserved
http://www.phoenixcontact.com