THIS DRAWING IS UNPUBLISHED. RELEASED FOR PUBLICATION -.-.
© COPYRIGHT - BY TYCO ELECTRONICS CORPORATION. ALL RIGHTS RESERVED.

LOC	DIST
AD	00

REVISIONS

P	LTR	DESCRIPTION	DATE	DWN	APVD
	F	ECO-07-021040	12SEP07	MB	MS

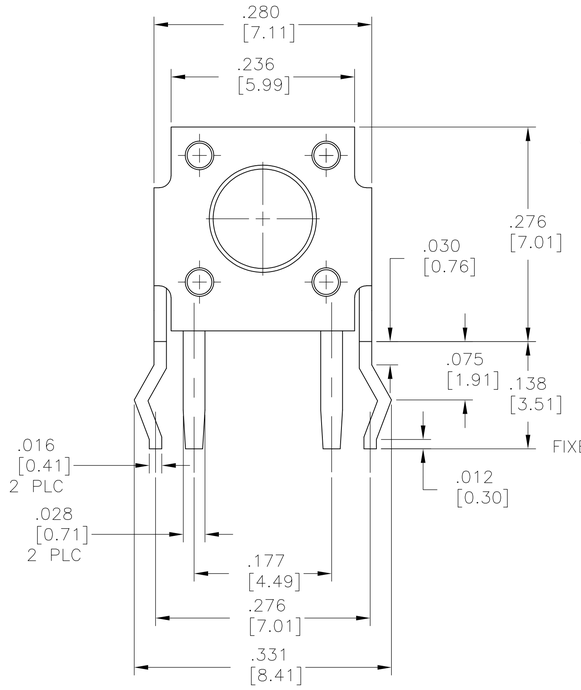

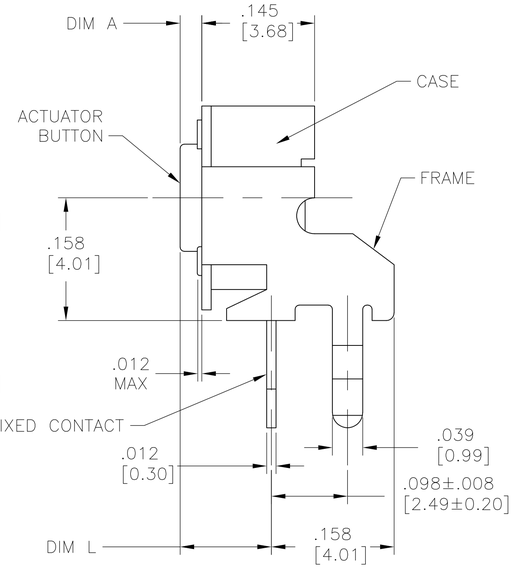

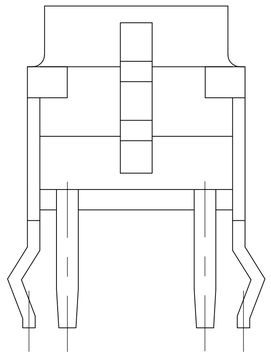

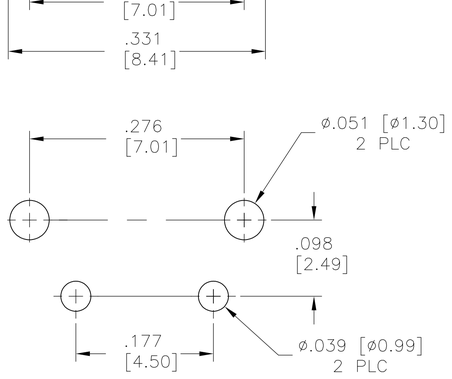

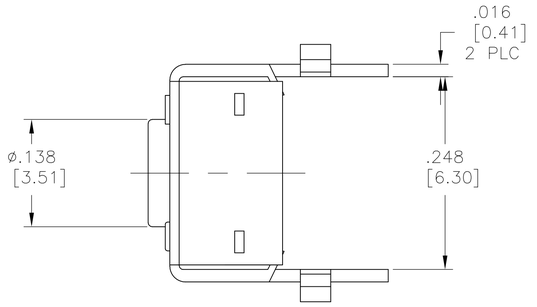

RECOMMENDED HOLE LAYOUT
TOLERANCE ±.002 UNLESS
OTHERWISE NOTED

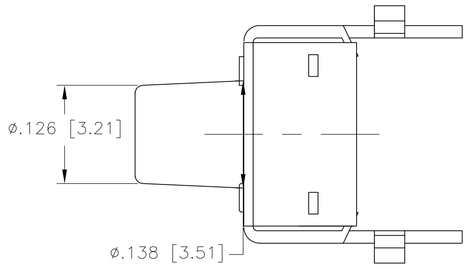

FSMRA5J

( )–INDICATES MOMENTARY POSITION		
CIRCUIT CHARACTERISTICS		
CONTACT POSITION		CIRCUIT DIAGRAM
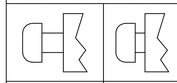		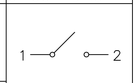
OFF	(ON) 1–2	

CASE: NYLON 6/6, BLACK
FRAME/BRACKET: STEEL, TIN OVER NICKEL
ACTUATOR BUTTON: PBT OR NYLON 6/6 (SEE TABLE), UL94HB, COLOR SEE TABLE
MOVING CONTACT: COPPER ALLOY, SILVER PLATE
FIXED CONTACT/TERMINALS: COPPER ALLOY, SILVER OVER NICKEL PLATE

ELECTRICAL:
MAX CONTACT RATING: 50MILLIAMPS@24V DC
MIN CONTACT RATING: 10MICROAMPS@1V DC
INITIAL CONTACT RESISTANCE: 100 MILLIOHMS MAX
INSULATION RESISTANCE: 100 MEGOHMS @ 100 VDC MIN.
DIELECTRIC STRENTGH: 500 VAC 50/60 Hz FOR 1 MINUTE
LIFE EXPECTANCY: 100,000 CYCLES

MECHANICAL:
ACTUATION FORCE: SEE TABLE
ACTUATION TRAVEL: 0.25±0.10[.010±.004]

ENVIRONMENTAL:
OPERATING TEMPERATURE: –35°C TO +85°C
STORAGE TEMPERATURE: –35°C TO +85°C
SOLDER HEAT RESISTANCE PER 109–201 COND B
SOLDERABILITY PER EIA–364–52 CLASS 1, CATEGORY 2

1 ALL MATERIALS AND FINISHES SHALL COMPLY WITH EH DIRECTIVE 2002/95/EC OF 27 JAN 2003 (ROHS)

ACTUATOR MAT'L	ACTUATOR COLOR	ACTUATION FORCE	DIM L	DIM A	ALCO P/N	TE P/N
NYLON 6/6	RED	260 +/–50 GF	.624 (15.85)	.522 (13.25)	FSMRA8JHA	2-1825027-4
NYLON 6/6	BLACK	160 +/–50 GF	.624 (15.85)	.522 (13.25)	FSMRA8JH	2-1825027-3
NYLON 6/6	BROWN	100 +/–30 GF	.624 (15.85)	.522 (13.25)	FSMRA8JHL	2-1825027-2
NYLON 6/6	RED	260 +/–50 GF	.467 (11.85)	.364 (9.24)	FSMRA7JHA	2-1825027-1
NYLON 6/6	BLACK	160 +/–50 GF	.467 (11.85)	.364 (9.24)	FSMRA7JH	2-1825027-0
NYLON 6/6	BROWN	100 +/–30 GF	.467 (11.85)	.364 (9.24)	FSMRA7JHL	1-1825027-9
NYLON 6/6	RED	260 +/–50 GF	.270 (6.85)	.167 (4.24)	FSMRA6JHA	1-1825027-8
NYLON 6/6	WHITE	160 +/–50 GF	.270 (6.85)	.167 (4.24)	FSMRA6JH	1-1825027-7
NYLON 6/6	BROWN	100 +/–30 GF	.270 (6.85)	.167 (4.24)	FSMRA6JHL	1-1825027-6
NYLON 6/6	RED	260 +/–50 GF	.242 (6.15)	.140 (3.55)	FSMRA5JHA	1-1825027-5
NYLON 6/6	IVORY	160 +/–50 GF	.242 (6.15)	.140 (3.55)	FSMRA5JH	1-1825027-4
NYLON 6/6	BROWN	100 +/–30 GF	.242 (6.15)	.140 (3.55)	FSMRA5JHL	1-1825027-3
PBT	RED	260 +/–50 GF	.329 (8.35)	.226 (5.74)	FSMRA4JHA	1-1825027-2
PBT	BLACK	160 +/–50 GF	.329 (8.35)	.226 (5.74)	FSMRA4JH	1-1825027-1
PBT	BROWN	100 +/–30 GF	.329 (8.35)	.226 (5.74)	FSMRA4JHL	1-1825027-0
NYLON 6/6	RED	260 +/–50 GF	.230 (5.85)	.128 (3.25)	FSMRA3JHA	1825027-9
NYLON 6/6	BLUE	160 +/–50 GF	.230 (5.85)	.128 (3.25)	FSMRA3JH	1825027-8
NYLON 6/6	BROWN	100 +/–30 GF	.230 (5.85)	.128 (3.25)	FSMRA3JHL	1825027-7
PBT	RED	260 +/–50 GF	.152 (3.86)	.049 (1.24)	FSMRA2JHA	1825027-6
PBT	BLACK	160 +/–50 GF	.152 (3.86)	.049 (1.24)	FSMRA2JH	1825027-5
PBT	BROWN	100 +/–30 GF	.152 (3.86)	.049 (1.24)	FSMRA2JHL	1825027-4
PBT	RED	260 +/–50 GF	.124 (3.15)	.022 (0.56)	FSMRA1JHA	1825027-3
PBT	BLACK	160 +/–50 GF	.124 (3.15)	.022 (0.56)	FSMRA1JH	1825027-2
PBT	BROWN	100 +/–30 GF	.124 (3.15)	.022 (0.56)	FSMRA1JHL	1825027-1

THIS DRAWING IS A CONTROLLED DOCUMENT.

DIMENSIONS: INCHES [mm]

TOLERANCES UNLESS OTHERWISE SPECIFIED:
0 PLC ± –
1 PLC ± –
2 PLC ± –
3 PLC ± .012[0.30]
4 PLC ± –
ANGLES ± –

MATERIAL 1
FINISH –

DWN M.BINNER 26OCT04
CHK M.SARVER 26OCT04
APVD M.SARVER 26OCT04
PRODUCT SPEC –
APPLICATION SPEC –
WEIGHT –

Tyco Electronics
Tyco Electronics Corporation
Harrisburg, Pa 17105-3608

NAME MICRO-MINIATURE PUSHBUTTON SWITCH

SIZE	CAGE CODE	DRAWING NO	RESTRICTED TO
A1	00779	C-1825027	–

CUSTOMER DRAWING

SCALE	SHEET	REV
10:1	1 OF 1	F