Panasonic
ideas for life

COMPACT SIZE SIDE LIMIT SWITCHES

ML (AZ7) Limit Switches

Lamp attached- and terminal mold models also available.

Short roller lever type

FEATURES

1. Long life
High efficiency coil spring switching mechanism for long life: More than 10^7 mechanical operations.

2. Great mechanical strength while being compact and lightweight
The attachment pitch is 25.4mm (1.000inch), same as for the Z basic model microswitch. Also, the outer cover cap uses a strong plastic with excellent mechanical characteristics. An M4 bolt can be used for the attachment.

3. The overtravel (O.T.) is large with great shock absorption

4. The switch itself is constructed to be dust-proof and oil resistant
The switch itself is closed flush with the diaphragm and the compressed rubber ring, so that the terminal mold model is perfectly flush with the terminal parts.

TYPICAL APPLICATIONS

Used in sequence control of food processing machines, automatic packaging machines, conveyers, and processors. Ideal for light industry machinery when installation pace is limited and a protective construction is sought.

PRODUCT TYPE

1. Standard type

Actuator	Part No.
Short push plunger	AZ7100
Push plunger	AZ7110
Hinge lever	AZ7120
Roller lever	AZ7121
One-way roller lever	AZ7124
Hinge short lever	AZ7140
Short roller lever	AZ7141
One-way short roller lever	AZ7144
Panel mount push plunger	AZ7310
Panel mount roller plunger	AZ7311
Panel mount cross roller plunger	AZ7312
Flexible rod	AZ7166

Note 1. When ordering an overseas-specified product,refer to the foreign standards overview.

04/2005

FOREIGN STANDARDS

Standards	Applicable product	Part No.
UL	File No. : E-122222 Ratings : 10A 250V AC Product type : Standard type only	Order by standard part No.
CSA	File No. : LR55880 Ratings : 10A 250V AC Product type : Standard type only	
TÜV	File No. : J9551204 Ratings : AC-15 2A/250V~ Product type : Standard type only	

SPECIFICATIONS

1. Rating

Rated control voltage \ Load	Resistive load (cosϕ≒1)	Inductive load (cosϕ≒0.4)	Motor or lamp load	
			N.C. contact	N.O. contact
125V AC	10A	6A	3A	1.5A
250V AC	10A	4A	1.5A	1A
115V DC	0.4A	0.05A	–	–

2.Characteristics

Contact arrangement		1 Form C
Initial contact resistance, max.		15mΩ* (By voltage drop 6 to 8V DC at rated current)
Initial insulation resistance (At 500V DC)		Min. 100 MΩ
Initial breakdown voltage		1,500 Vrms for 1 min Between non-consecutive terminals 2,000 Vrms for 1 min Between dead metal parts and each terminal 2,000 Vrms for 1 min Between ground and each terminal
Shock resistance	In the free position	Max. 98m/s²{10G}
	In the full operating position	Max. 294m/s²{30G}
Vibration resistance		55 Hz, double amplitude of 1.5 mm
Expected life (Min. operation)	Mechanical	10^7 (at 50 cpm)
	Electrical	2×10^5 (at 20 cpm)
Ambient temperature/Ambient humidity		–20 to +60°C –4 to +140°F/Max. 95% R.H. (at 20°C 68°F)
Max. operating speed		120 cpm

*The resistance of a copper wire is not included.

3.EN60947-5-1 performance

Item	Rating
Rated insulation voltage (Ui)	250VAC
Rated impulse withstand voltage (Uimp)	2.5kV
Switching over voltage	2.5kV
Rated enclosed thermal current (Ithe)	10A
Conditional short-circuit current	100A
Short-circuit protection device	10A fuse
Protective construction	IP64 (switch)
Pollution degree	3

4. Operating characteristics

Characteristics / Actuator	O.F. (N{gf}) max.	R.F. (N{gf}) min.	Pretravel (P.T.), max. mm inch	Movement Differential (M.D.), max. mm inch	Overtravel (O.T.), min. mm inch	Operating Position (O.P.) mm inch
Short push plunger	5.88 {600}	0.98 {100}	2.0 .079	0.8 .031	0.8 .031	30±0.8 1.181±.031
Push plunger	5.88 {600}	0.98 {100}	2.0 .079	0.8 .031	5.0 .197	44±1.2 1.732±.047
Hinge lever	1.47 {150}	0.39 {40}	13.5 .531	3.2 .126	4.0 .157	25±2.0 .984±.079
Roller lever	1.77 {180}	0.49 {50}	11.0 .433	2.4 .094	3.0 .118	40±1.9 1.575±.75
One-way roller lever	1.96 {200}	0.59 {60}	11.0 .433	2.4 .094	3.0 .118	50±2.0 1.969±.079
Hinge short lever	2.16 {200}	0.59 {60}	8.5 .335	2.0 .079	2.5 .098	25±1.3 .984±.051
Short roller lever	2.35 {240}	0.78 {80}	6.5 .256	1.5 .059	2.0 .079	40±1.6 1.575±.063
One-way short roller lever	2.75 {280}	0.98 {100}	6.5 .256	1.5 .059	2.0 .079	50±1.6 1.969±.063
Panel mount push plunger	5.88 {600}	0.98 {100}	2.0 .079	0.8 .031	6.0 .236	21.8±0.8 .858±.031
Panel mount roller plunger	5.88 {600}	0.98 {100}	2.0 .079	0.8 .031	6.0 .236	33.3±1.2 1.311±.047
Panel mount cross roller plunger	5.88 {600}	0.98 {100}	2.0 .079	0.8 .031	6.0 .236	33.3±1.2 1.311±.047
Flexible rod	1.18 {120}	–	25 .984	–	11 .433	36 1.417 (T.T.)

Note) For the operating characteristics, refer to the TECHNICAL INFORMATION.

5. Protective characteristics

Protective construction / IEC	Screw terminal type	Epoxy-sealed terminal type
IP60	○	○
IP64	–	○

DATA

1. Life curve

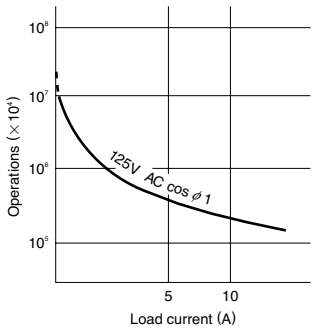

WIRING DIAGRAM

Circuit

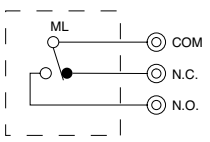

Terminal

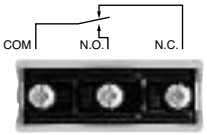

DIMENSIONS

mm inch

Short push plunger type

AZ7100

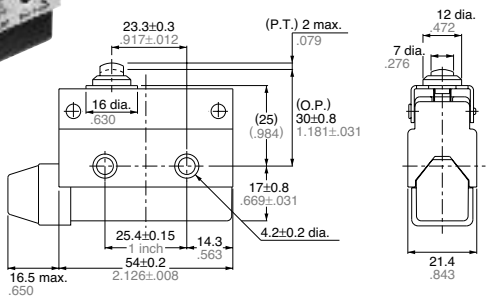

Push plunger type

AZ7110

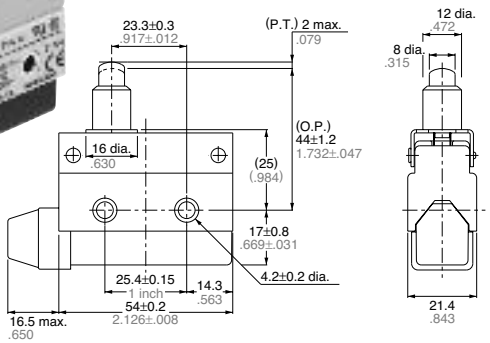

General tolerance: ±0.4 ±.016

Hinge lever type

AZ7120

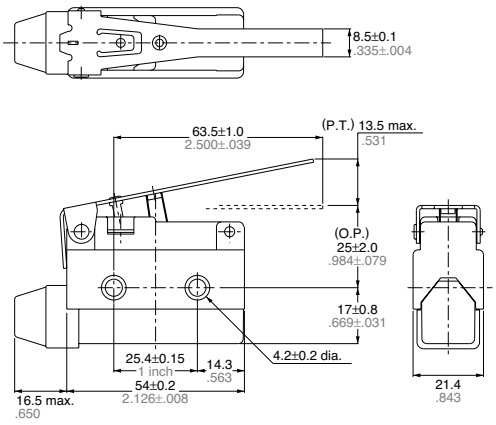

Roller lever type

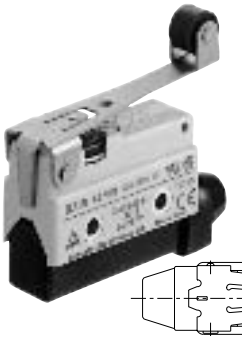

AZ7121

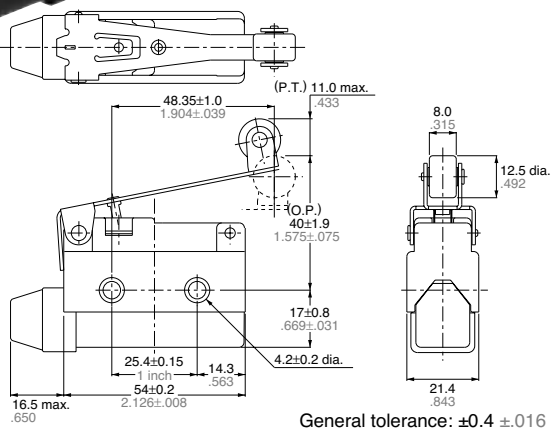

General tolerance: ±0.4 ±.016

One-way roller lever type

AZ7124

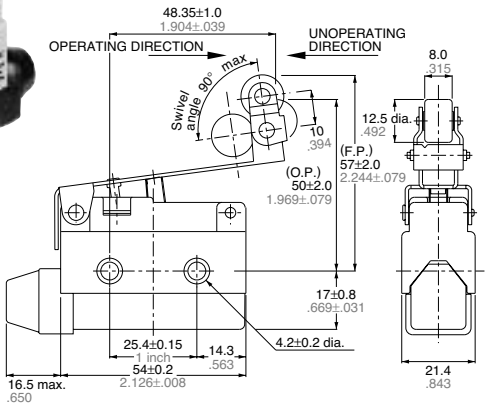

Hinge short lever type

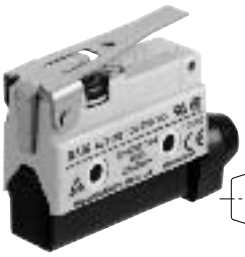

AZ7140

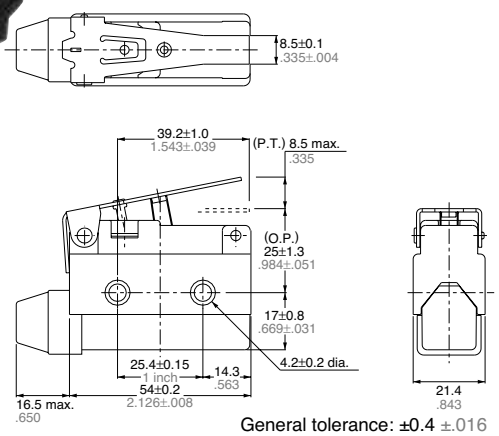

General tolerance: ±0.4 ±.016

Short roller lever type

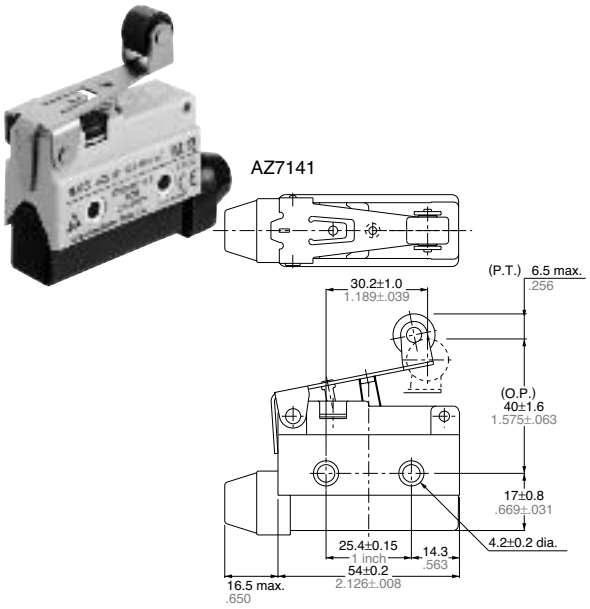

One-way short roller lever type

mm inch

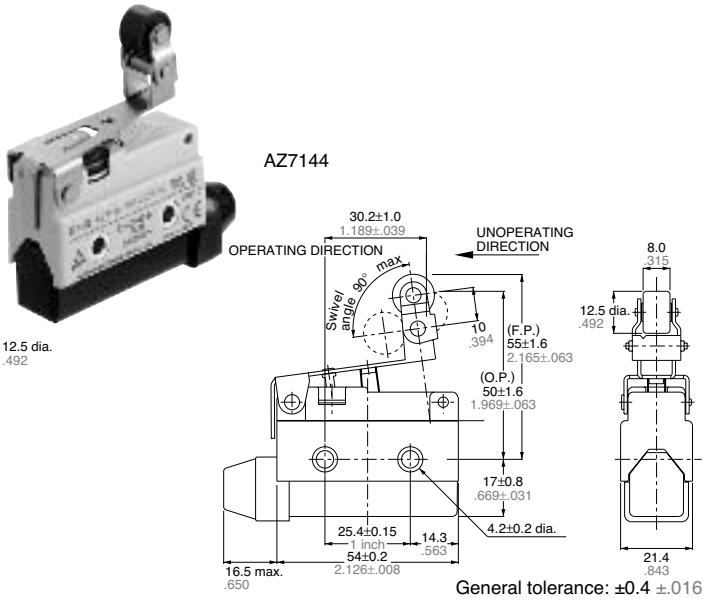

General tolerance: ±0.4 ±.016

Panel mount push plunger type

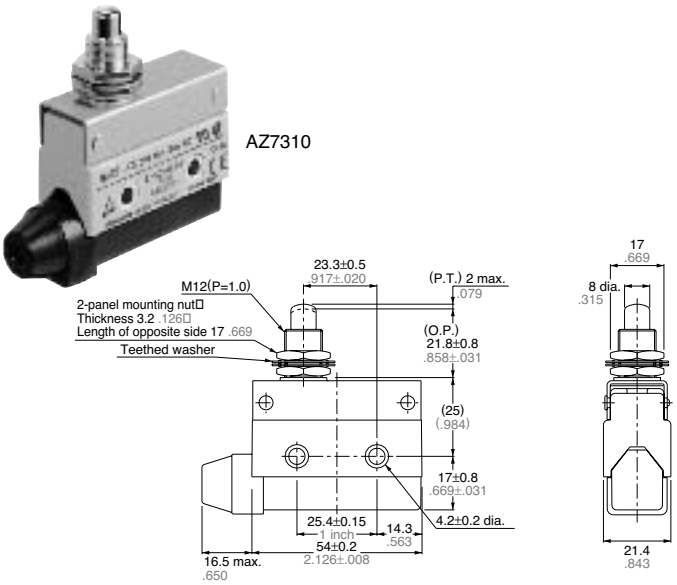

Panel mount roller planger type

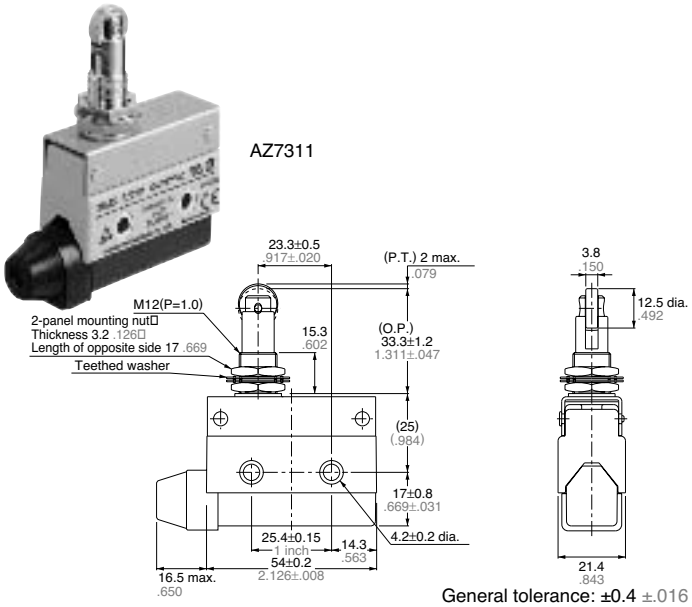

General tolerance: ±0.4 ±.016

Panel mount cross roller planger type

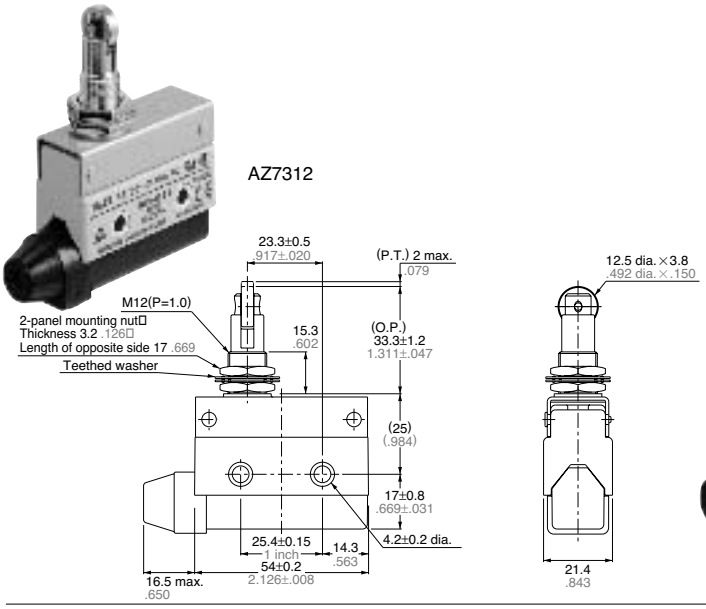

Flexible rod type

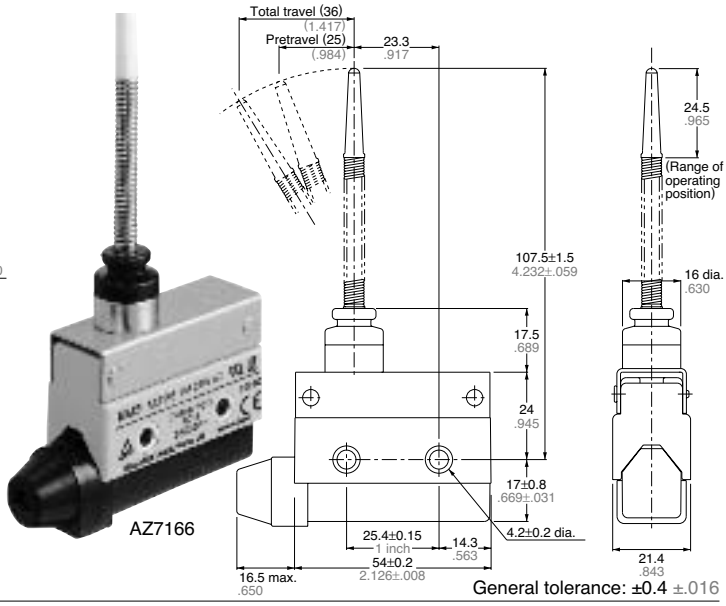

General tolerance: ±0.4 ±.016

CAUTIONS

1. When the switch is to be used in places where oil or is abundant, bore a drain hole in the bottom of the terminal cover.
2. Avoid places where highly acid or alkaline fluids are used or high temperatures prevail.
3.Wiring
(1) Remove the terminal cover with a ⊖ driver.

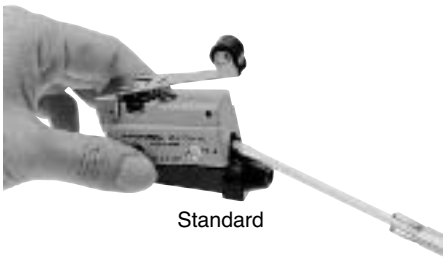

Standard

(2) Insert the lead wire through the knock-out of the terminal cover.
(3) Connect the lead wire to the terminal. When connecting the terminals with the fasten lug, those with the insulation sleeve are recommended.
(4) The terminal cover can be mounted in both directions.
In this case, fasten the terminal cover in the opposite direction.

N.C.

COM

• For epoxy-sealed terminal types, there are two types by the cord outlet direction; N.C. side and COM side.
4. Flexible rod type
(1) Put the detective object to the tip of plastic part.
(2) Avoid pushing the tip of actuating spring in the direction of axis. In the places of oil or water splashes and much dust area, use the limit switch with keeping the actuating spring in the vertical direction.