SERIES 2410 - ERGONOMIC FOOT SWITCHES

TO 6 (2.5) A 250 V AC



PRODUCT FEATURES

- Long life endurance up to 300 000 mechanical switching cycles
- Robust design
- Cable can be retrofitted by customer
- Ergonomical dimensions with different switch actuating forces
- With wall hanger

ON REQUEST

- Other colors
- Customized cable assembly
- Special switching functions
- Other connection variants

Mechanical life endurance		30E4
Proof tracking		250 PTI
Insulation spacing		acc. to EN 61058 for reinforced or double insulation
Material	actuator	treadplate of PA
	housing	PA
Approval marks		





SERIES 2410 - ERGONOMIC FOOT SWITCHES

TO 6 (2.5) A 250 V AC



single-pole

	Actuator color / printing	Housing color	6 (2.5) A 250 V AC 5E4	Connection type	Connection description	Contact distance in mm	Contact material	Operating force in N	Miscellaneous	Stock version
Normally open contact (SPNO)										
2410.0301			●		2 terminals	< 3	Ag	31 ±5	with switch 1005.1801	●
Changeover switch (SPDT momentary)										
2410.0401			●		3 terminals	< 3	Ag	31 ±5	with switch 1005.1407	●



Combination

	Actuator color / printing	Housing color	6 (2.5) A 250 V AC 5E4	Connection type	Connection description	Contact distance in mm	Contact material	Operating force in N	Miscellaneous	Stock version
Normally open contact (SPNO) double-pole										
2410.1001			●		assembled	≥ 3	Ag	45 ±7	1 x PE connector (3 000 mm) / 1 x PE coupling (250 mm) 2 x 1005.1802	●
Normally closed contact (SPNC) / Changeover switch (SPDT momentary)										
2410.0101			●		3 terminals	< 3	Ag	step 1: 25 N / step 2: 85 N	with switch 1005.1407 with switch 1005.1501 switching in sequence	●
Normally open contact (SPNO) / Changeover switch (SPDT momentary)										
2410.0501			●		5 terminals	< 3	Ag	step 1: 22 N / step 2: 31 N	with switch 1005.1407 with switch 1005.1801 switching in sequence changeover switch and normally open contact can be connected separately	●

SERIES 2410 - ERGONOMIC FOOT SWITCHES

TO 6 (2.5) A 250 V AC



Basic type 2410

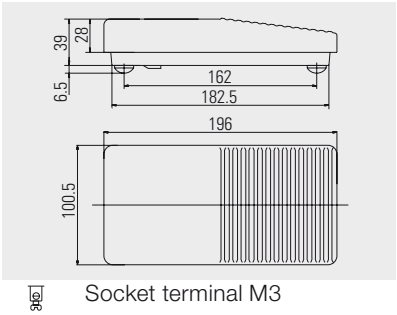

Socket terminal M3



Protection hood
248.008.013

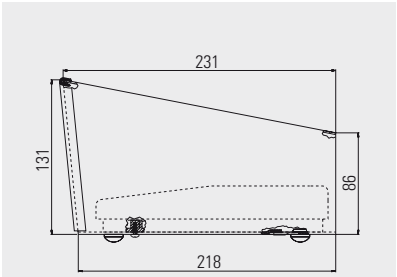

Protection hood of steel sheet in color orange similar to RAL 2004 with edge guard and rubber feet as well as fastening for foot switch of the basic type 2410

Circuit diagram

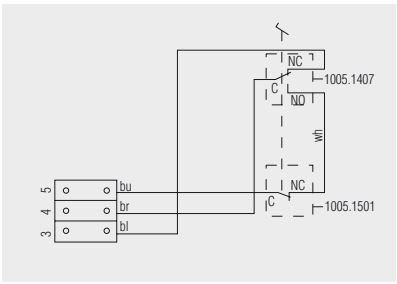

2410.0101

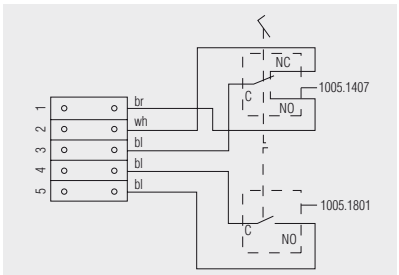

2410.0501

bu - blue
br - brown
bl - black
wh - white
C - common terminal
NC - normally closed contact
NO - normally open contact