Sensor/Actuator cable - SAC-5P-M12MS/0,6-PUR/ M12FR - 1681635

Please be informed that the data shown in this PDF Document is generated from our Online Catalog. Please find the complete data in the user's documentation. Our General Terms of Use for Downloads are valid (http://download.phoenixcontact.com)



Sensor/Actuator cable, 5-position, PUR halogen-free, Black-gray RAL 7021, Plug straight M12, A-coded, on Socket angled M12, A-coded, Cable length: 0.6 m

Product Features

- Easy and safe: 100% electrically tested plug-in components
- Our standard: robust halogen-free PUR cable

Key commercial data

package_quantity	1
GTIN	4017918158088

Technical data

Dimensions

Length of cable	0.6 m

Ambient conditions

Ambient temperature (operation)	-25 °C ... 90 °C (Plug / socket)
Degree of protection	IP65
Degree of protection	IP67
Degree of protection	IP68

General

Rated current at 40°C	4 A
Rated voltage	60 V
Number of positions	5
Contact resistance	≤ 5 mΩ
Insulation resistance	≥ 100 MΩ
Coding	A - standard
Standards/regulations	M12 connector IEC 61076-2-101
Status display	No
Protective circuit/component	Unwired
Surge voltage category	II
Pollution degree	3
Insertion/withdrawal cycles	≥ 100

Sensor/Actuator cable - SAC-5P-M12MS/0,6-PUR/ M12FR - 1681635

Technical data

General

Torque	0.4 Nm (M12 connector)

Material

Inflammability class according to UL 94	HB
Contact material	CuSn
Contact surface material	Ni/Au
Contact carrier material	TPU GF
Material of grip body	TPU, hardly inflammable, self-extinguishing
Material, knurls	Zinc die-cast, nickel-plated
Sealing material	NBR

Cable

Cable type	PUR halogen-free black
Cable type (abbreviation)	PUR
UL AWM style	20549
Conductor cross section	5x 0.34 mm² (signal line)
AWG signal line	22
Conductor structure signal line	42x 0.10 mm
Core diameter including insulation	1.27 mm ±0.02 mm (signal line)
Thickness, insulation	approx. 0.7 mm
Wire colors	brown, white, blue, black, green-yellow
External sheath, color	Black-gray RAL 7021
External cable diameter D	5 mm ±0.15 mm
Smallest bending radius, fixed installation	25 mm
Smallest bending radius, movable installation	50 mm
Number of bending cycles	4000000
Bending radius	50 mm
Traversing path	10 m
Traversing rate	3 m/s
Acceleration	10 m/s²
Cable weight	35 kg/km
Outer sheath, material	PUR
Conductor material	Bare Cu litz wires
Insulation resistance	≥ 16 GΩ*km (at 20 °C)
Conductor resistance	max. 58 Ω/km (at 20 °C)
Nominal voltage, cable	300 V
Test voltage, cable	3000 V
Special properties	Flexible cable conduit capable
Special properties	Silicone-free
Special properties	Free of substances which would hinder coating with paint or varnish

Sensor/Actuator cable - SAC-5P-M12MS/0,6-PUR/ M12FR - 1681635

Technical data

Cable

Special properties	Flexible
Flame resistance	in accordance with DIN UL-Style 20549
Halogen-free	in accordance with DIN VDE 0472 part 815
Resistance to oil	in accordance with DIN EN 60811-2-1
Other resistance	Highly resistant to acids, alkaline solutions and solvents
Other resistance	hydrolysis and microbe resistant
Other resistance	Resistant to salt water
Other resistance	partly UV-resistant in accordance with DIN EN ISO 4892-2-A
Ambient temperature (operation)	-40 °C ... 80 °C (cable, fixed installation)
Ambient temperature (operation)	-25 °C ... 80 °C (cable, flexible installation)

classifications

eCl@ss

eCl@ss 4.0	27060306
eCl@ss 4.1	27060306
eCl@ss 5.0	27061801
eCl@ss 5.1	27061801
eCl@ss 6.0	27061801
eCl@ss 7.0	27061801
eCl@ss 8.0	27061801

ETIM

ETIM 2.0	EC000830
ETIM 3.0	EC001855
ETIM 4.0	EC001855
ETIM 5.0	EC001855

UNSPSC

UNSPSC 6.01	31251501
UNSPSC 7.0901	31251501
UNSPSC 11	31251501
UNSPSC 12.01	31251501
UNSPSC 13.2	31251501

approvals

UL Listed / cUL Listed / GOST / cULus Listed /

Approval details

Sensor/Actuator cable - SAC-5P-M12MS/0,6-PUR/ M12FR - 1681635

approvals

UL Listed

Nominal voltage UN	125 V
Nominal current IN	4 A
mm²/AWG/kcmil	

cUL Listed

Nominal voltage UN	125 V
Nominal current IN	4 A
mm²/AWG/kcmil	

GOST

cULus Listed

accessories

Protective cap

PROT-M12 FS-PA-CHAIN - 1430873



PROT-M12 MS-PA-CHAIN - 1430899



Sensor/Actuator cable - SAC-5P-M12MS/0,6-PUR/ M12FR - 1681635

accessories

Safety locking

SAC-M12-EXCLIP-M - 1558988



SAC-M12-EXCLIP-F - 1558991



Conductor marking

PABA WH/15 - 1013151



PABA YE/15 - 1013698



PABA RD/15 - 1013944



Sensor/Actuator cable - SAC-5P-M12MS/0,6-PUR/ M12FR - 1681635

accessories

Marker carrier cable

PATO 2/15 - 1013122



PATO 3/15 - 1013135



PATO 4/15 - 1013148



Marker pen

B-STIFT - 1051993



Torque tool

TSD 04 SAC - 1208429



Sensor/Actuator cable - SAC-5P-M12MS/0,6-PUR/ M12FR - 1681635

accessories

TSD-M 1,2NM - 1212224



Screwdriver tools

TSD-M SAC-BIT ADAPTER - 1212600



SAC BIT M12-D15 - 1208432



Drawings

Dimensioned drawing

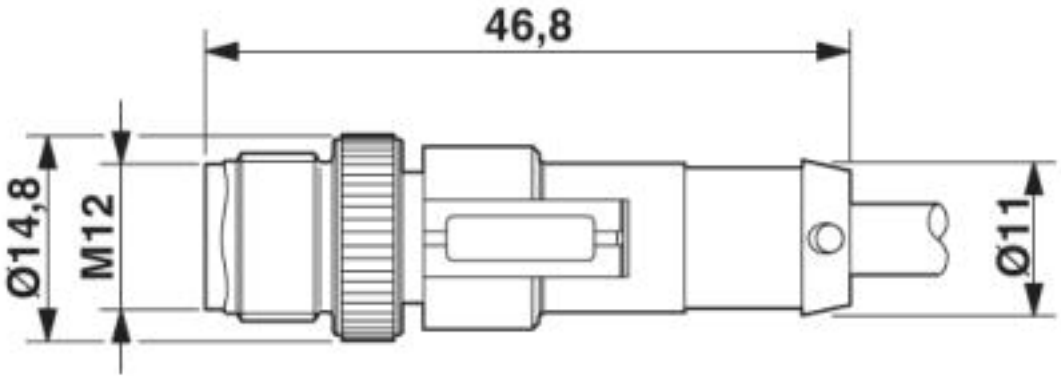

M12 x 1 plug, straight

Sensor/Actuator cable - SAC-5P-M12MS/0,6-PUR/ M12FR - 1681635

Dimensioned drawing

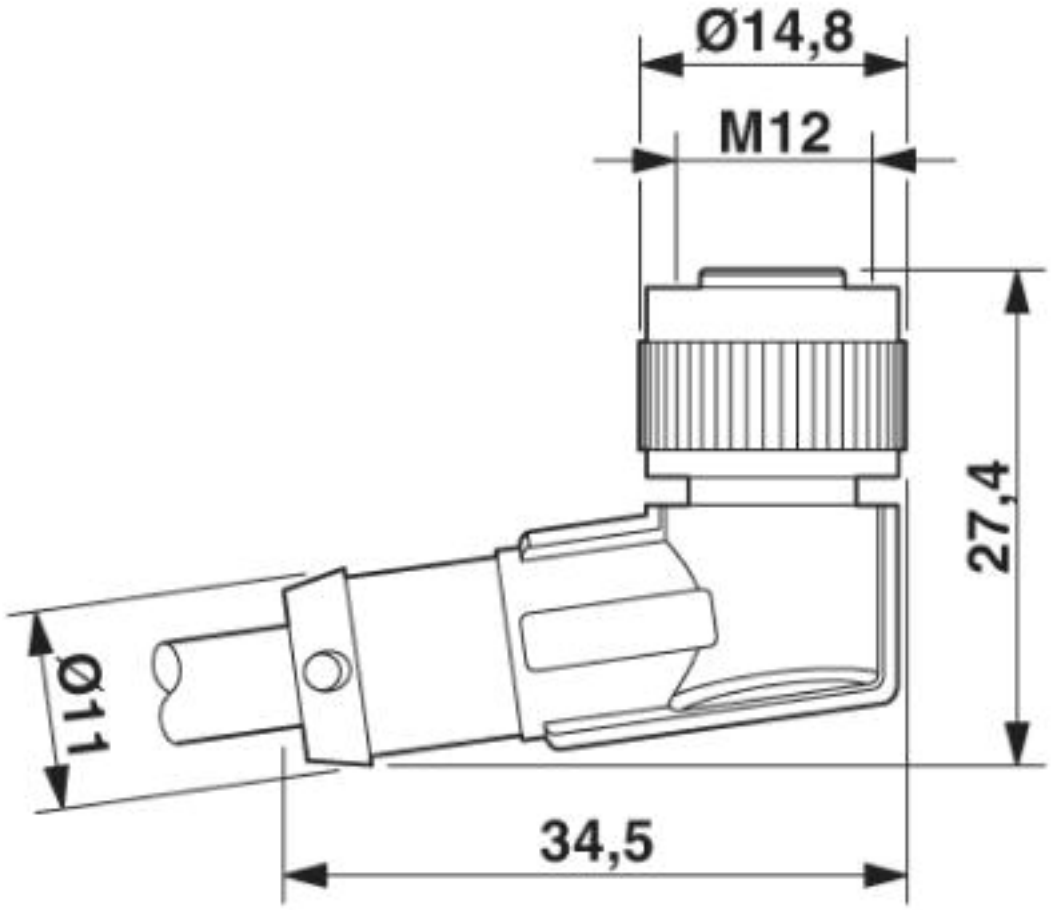

M12 x 1 socket, angled

Sensor/Actuator cable - SAC-5P-M12MS/0,6-PUR/ M12FR - 1681635

Circuit diagram



Contact assignment of the M12 plug and the M12 socket

Sensor/Actuator cable - SAC-5P-M12MS/0,6-PUR/ M12FR - 1681635

Schematic diagram

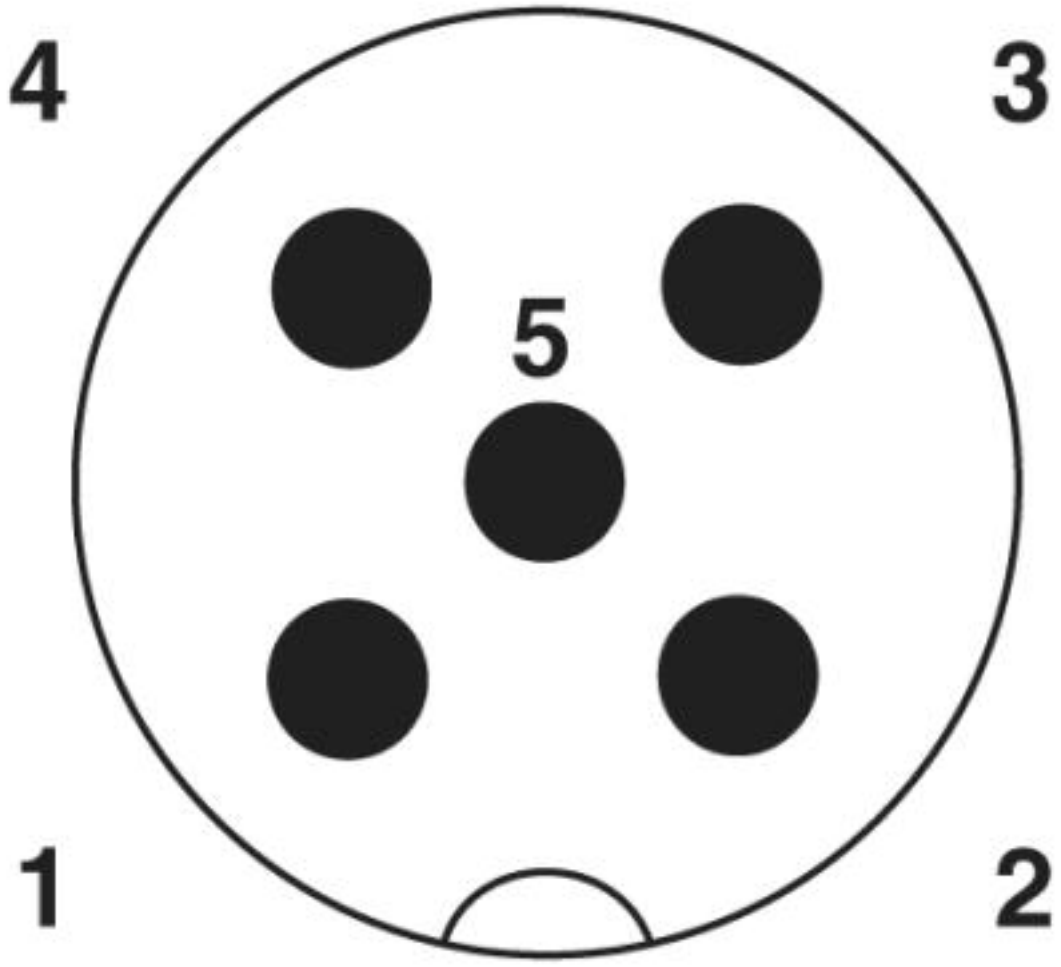

Pin assignment M12 male connector, 5-pos., A-coded, male side

Sensor/Actuator cable - SAC-5P-M12MS/0,6-PUR/ M12FR - 1681635

Schematic diagram

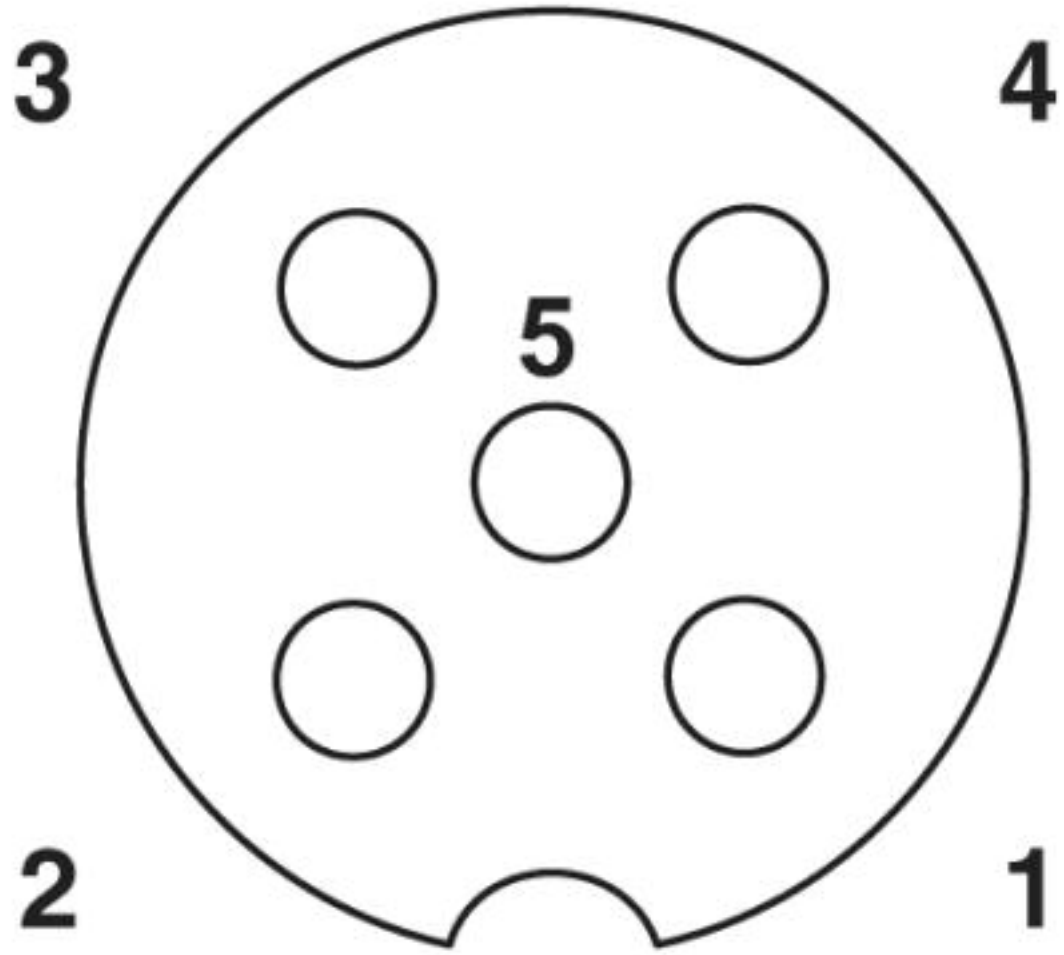

Pin assignment M12 socket, 5-pos., A-coded, socket side view

Sensor/Actuator cable - SAC-5P-M12MS/0,6-PUR/ M12FR - 1681635

Cable cross section

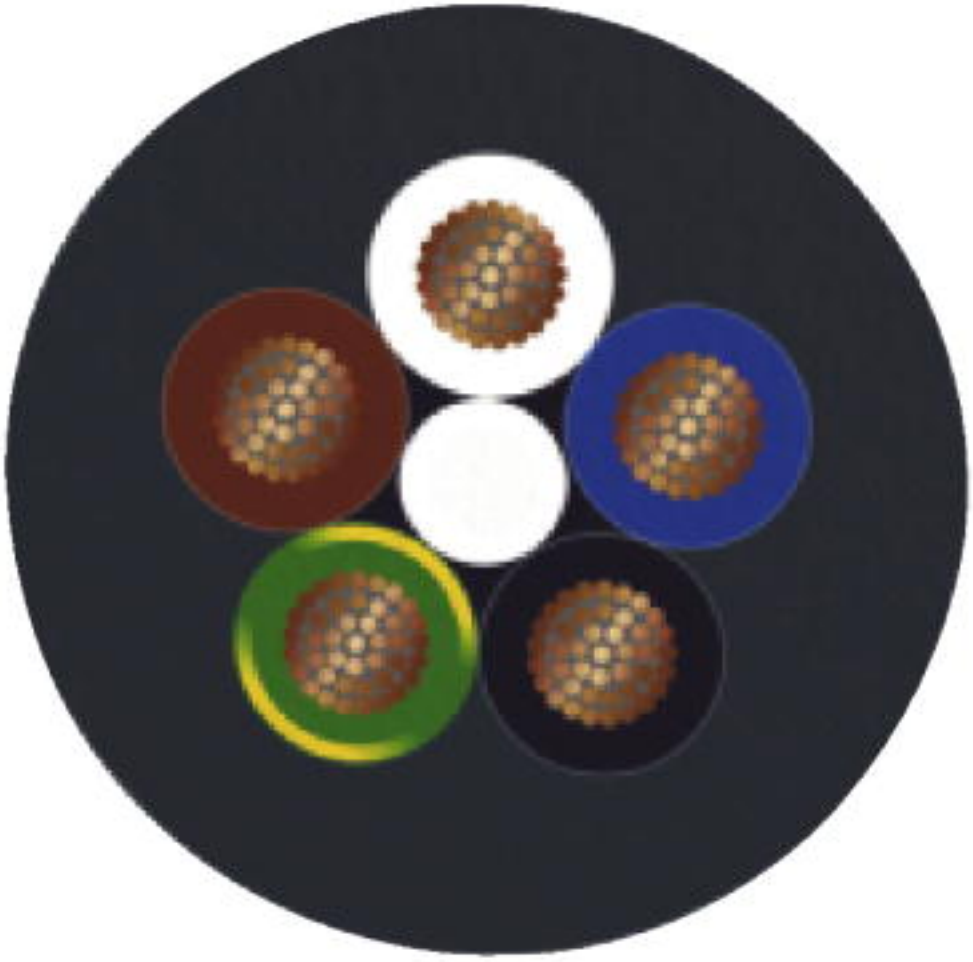

PUR halogen-free black [PUR]

© Phoenix Contact 2013 - all rights reserved
http://www.phoenixcontact.com