Sensor/Actuator cable - SAC-3P-M12MR/1,5-PUR/M 8FS - 1668894

Please be informed that the data shown in this PDF Document is generated from our Online Catalog. Please find the complete data in the user's documentation. Our General Terms of Use for Downloads are valid (http://download.phoenixcontact.com)



Sensor/Actuator cable, 3-position, PUR halogen-free, Black-gray RAL 7021, Plug angled M12, A-coded, on Socket straight M8, Cable length: 1.5 m

Product Features

- Easy and safe: 100% electrically tested plug-in components
- Our standard: robust halogen-free PUR cable

Key commercial data

package_quantity	1
GTIN	4017918135812

Technical data

Dimensions

Length of cable	1.5 m

Ambient conditions

Ambient temperature (operation)	-25 °C ... 90 °C (Plug / socket)
Degree of protection	IP65
Degree of protection	IP67
Degree of protection	IP68

General

Rated current at 40°C	4 A
Rated voltage	60 V
Number of positions	3
Contact resistance	≤ 5 mΩ
Insulation resistance	≥ 100 MΩ
Coding	A - standard
Standards/regulations	M12 connector IEC 61076-2-101
Standards/regulations	M8 connector IEC 61076-2-104
Status display	No
Protective circuit/component	Unwired
Surge voltage category	II
Pollution degree	3

Sensor/Actuator cable - SAC-3P-M12MR/1,5-PUR/M 8FS - 1668894

Technical data

General

Insertion/withdrawal cycles	≥ 100
Torque	0.4 Nm (M12 connector)
Torque	0.2 Nm (M8 connectors)

Material

Inflammability class according to UL 94	HB
Contact material	CuSn
Contact surface material	Ni/Au
Contact carrier material	TPU GF
Material of grip body	TPU, hardly inflammable, self-extinguishing
Material, knurls	Zinc die-cast, nickel-plated
Sealing material	NBR

Cable

Cable type	PUR halogen-free black
Cable type (abbreviation)	PUR
Cable abbreviation	Li9Y11Y-HF
UL AWM style	20549
Conductor cross section	3x 0.25 mm² (signal line)
AWG signal line	24
Conductor structure signal line	32x 0.10 mm
Core diameter including insulation	1.17 mm ±0.02 mm (signal line)
Thickness, insulation	≥ 0.38 mm (Core insulation)
Thickness, insulation	approx. 0.9 mm (Outer cable sheath)
Wire colors	brown, blue, black
Overall twist	3 wires, twisted
Length of twist, overall twist	40 mm
External sheath, color	Black-gray RAL 7021
External cable diameter D	4.4 mm ±0.15 mm
Smallest bending radius, fixed installation	22 mm
Smallest bending radius, movable installation	44 mm
Number of bending cycles	4000000
Bending radius	44 mm
Traversing path	10 m
Traversing rate	3 m/s
Acceleration	10 m/s²
Cable weight	24 kg/km
Outer sheath, material	PUR
Material conductor insulation	PP
Conductor material	Bare Cu litz wires
Insulation resistance	≥ 100 GΩ*km (at 20 °C)

Sensor/Actuator cable - SAC-3P-M12MR/1,5-PUR/M 8FS - 1668894

Technical data

Cable

Conductor resistance	≤ 78 Ω/km (at 20 °C)
Nominal voltage, cable	≤ 300 V
Test voltage, cable	≥ 3000 V
Special properties	Flexible cable conduit capable
Special properties	Silicone-free
Special properties	Free of substances which would hinder coating with paint or varnish
Flame resistance	in accordance with DIN UL-Style 20549
Halogen-free	in accordance with DIN VDE 0472 part 815
Resistance to oil	in accordance with DIN EN 60811-2-1
Other resistance	hydrolysis and microbe resistant
Other resistance	Highly resistant to acids, alkaline solutions and solvents
Other resistance	Resistant to salt water
Other resistance	partly UV-resistant in accordance with DIN EN ISO 4892-2-A
Ambient temperature (operation)	-40 °C ... 80 °C (cable, fixed installation)
Ambient temperature (operation)	-25 °C ... 80 °C (cable, flexible installation)

classifications

eCl@ss

eCl@ss 4.0	27060306
eCl@ss 4.1	27060306
eCl@ss 5.0	27061801
eCl@ss 5.1	27061801
eCl@ss 6.0	27061801
eCl@ss 7.0	27061801
eCl@ss 8.0	27061801

ETIM

ETIM 2.0	EC000830
ETIM 3.0	EC001855
ETIM 4.0	EC001855
ETIM 5.0	EC001855

UNSPSC

UNSPSC 6.01	31251501
UNSPSC 7.0901	31251501
UNSPSC 11	31251501
UNSPSC 12.01	31251501
UNSPSC 13.2	31251501

Sensor/Actuator cable - SAC-3P-M12MR/1,5-PUR/M 8FS - 1668894

approvals

UL Listed / cUL Listed / GOST / cULus Listed /

Approval details

UL Listed

Nominal voltage UN	125 V
Nominal current IN	4 A
mm²/AWG/kcmil	

cUL Listed

Nominal voltage UN	125 V
Nominal current IN	4 A
mm²/AWG/kcmil	

GOST

cULus Listed

accessories

Protective cap

PROT-M12 FS-PA-CHAIN - 1430873



Sensor/Actuator cable - SAC-3P-M12MR/1,5-PUR/M 8FS - 1668894

accessories

PROT-M 8 MS-PA-CHAIN - 1430860



Safety locking

SAC-M12-EXCLIP-M - 1558988



Conductor marking

PABA WH/15 - 1013151



PABA YE/15 - 1013698



PABA RD/15 - 1013944



Sensor/Actuator cable - SAC-3P-M12MR/1,5-PUR/M 8FS - 1668894

accessories

Marker carrier cable

PATO 2/15 - 1013122



PATO 3/15 - 1013135



PATO 4/15 - 1013148



Marker pen

B-STIFT - 1051993



Torque tool

TSD 02 SAC - 1208487



Sensor/Actuator cable - SAC-3P-M12MR/1,5-PUR/M 8FS - 1668894

accessories

TSD 04 SAC - 1208429



TSD-M 1,2NM - 1212224



Screwdriver tools

SAC BIT M8-D10 - 1208461



TSD-M SAC-BIT ADAPTER - 1212600



SAC BIT M12-D15 - 1208432



Drawings

Sensor/Actuator cable - SAC-3P-M12MR/1,5-PUR/M 8FS - 1668894

Dimensioned drawing

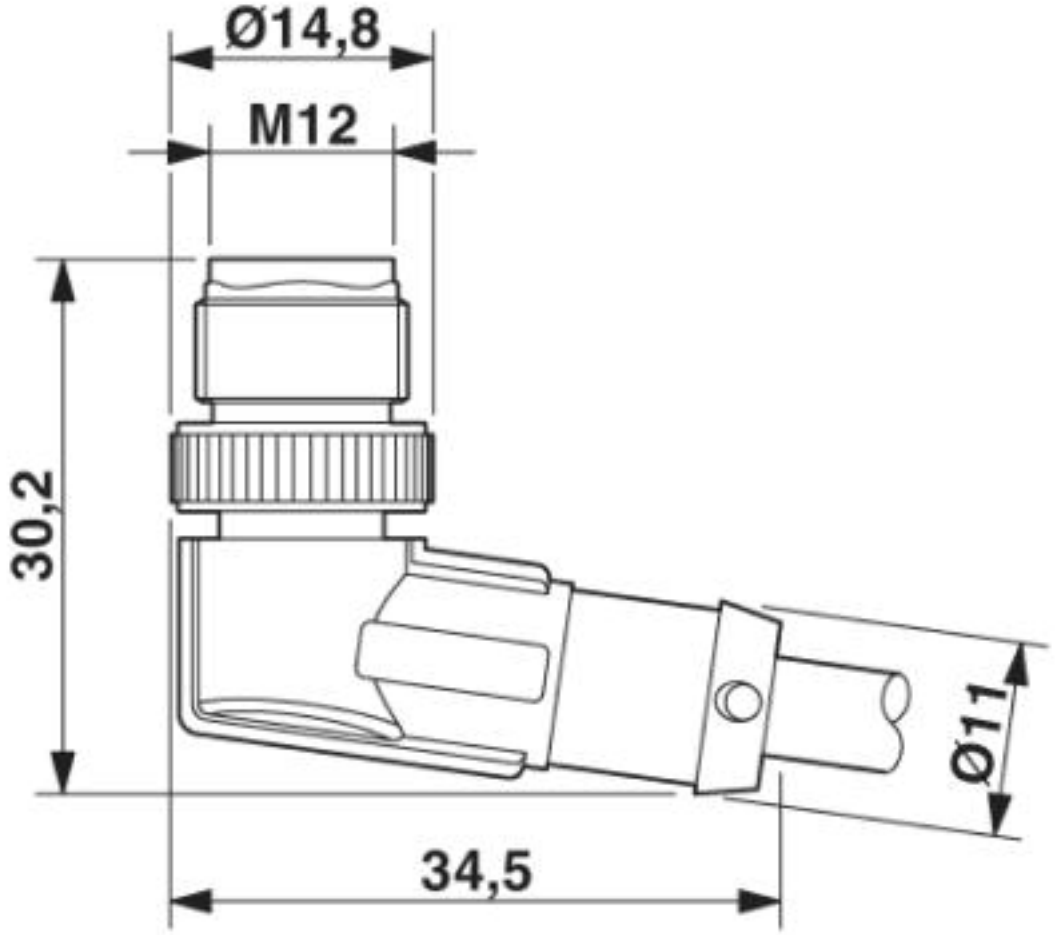

M12 x 1 male plug, angled

Sensor/Actuator cable - SAC-3P-M12MR/1,5-PUR/M 8FS - 1668894

Dimensioned drawing

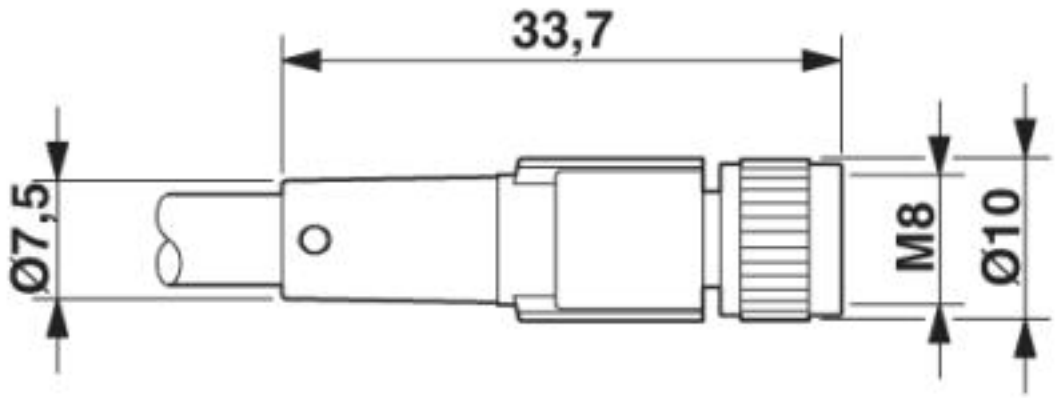

Socket M8 x 1, straight

Circuit diagram

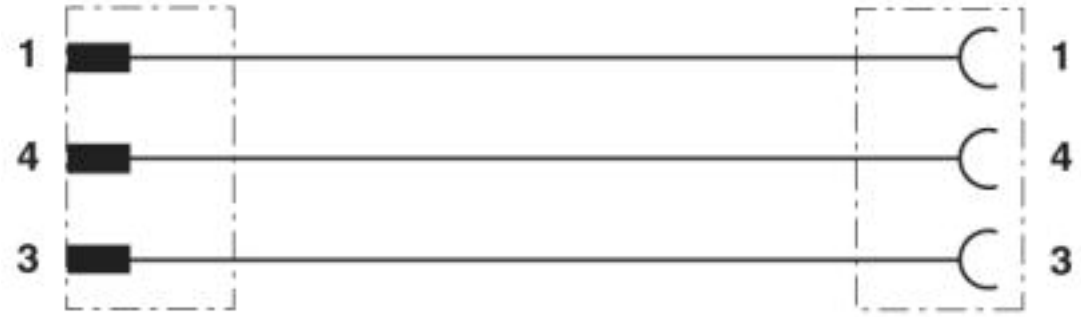

Contact assignment of M12 plugs / M8 sockets

Sensor/Actuator cable - SAC-3P-M12MR/1,5-PUR/M 8FS - 1668894

Schematic diagram

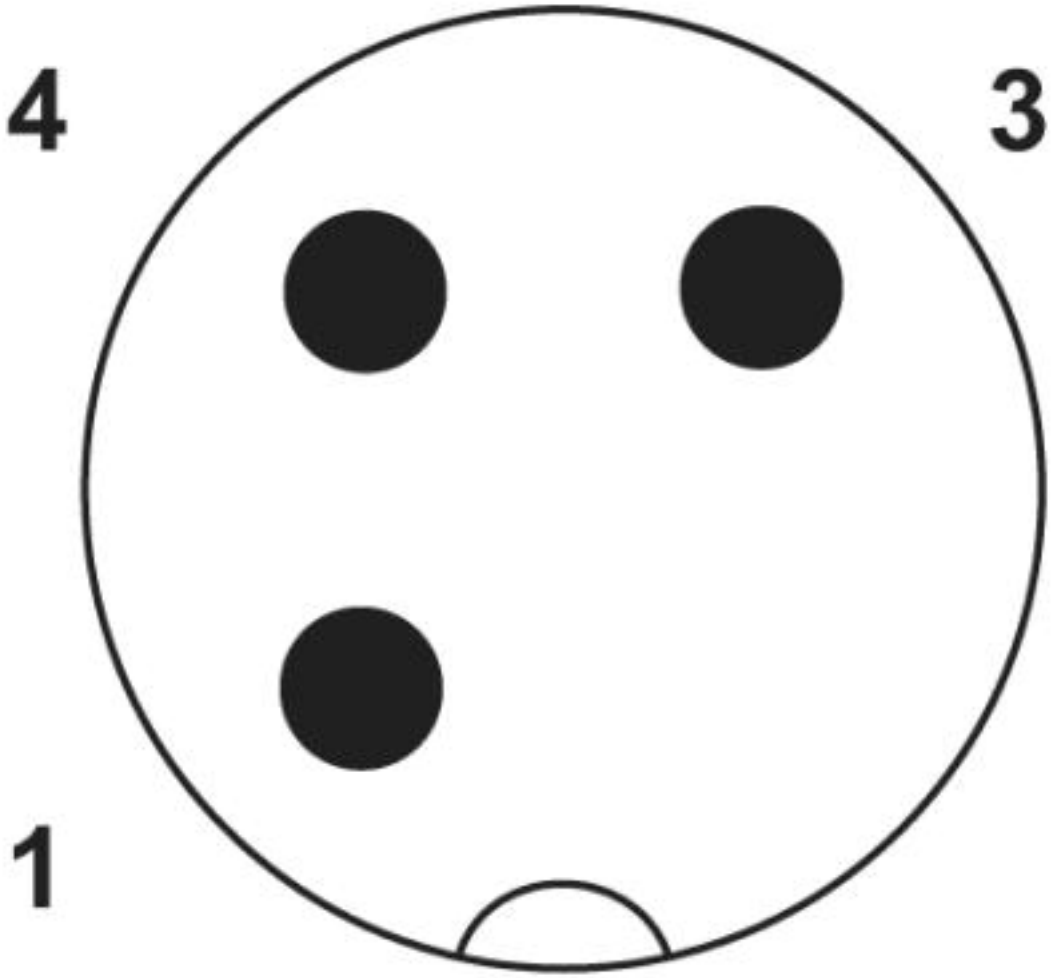

Pin assignment M12 plug, 3-pos., A-coded, view male side

Sensor/Actuator cable - SAC-3P-M12MR/1,5-PUR/M 8FS - 1668894

Schematic diagram

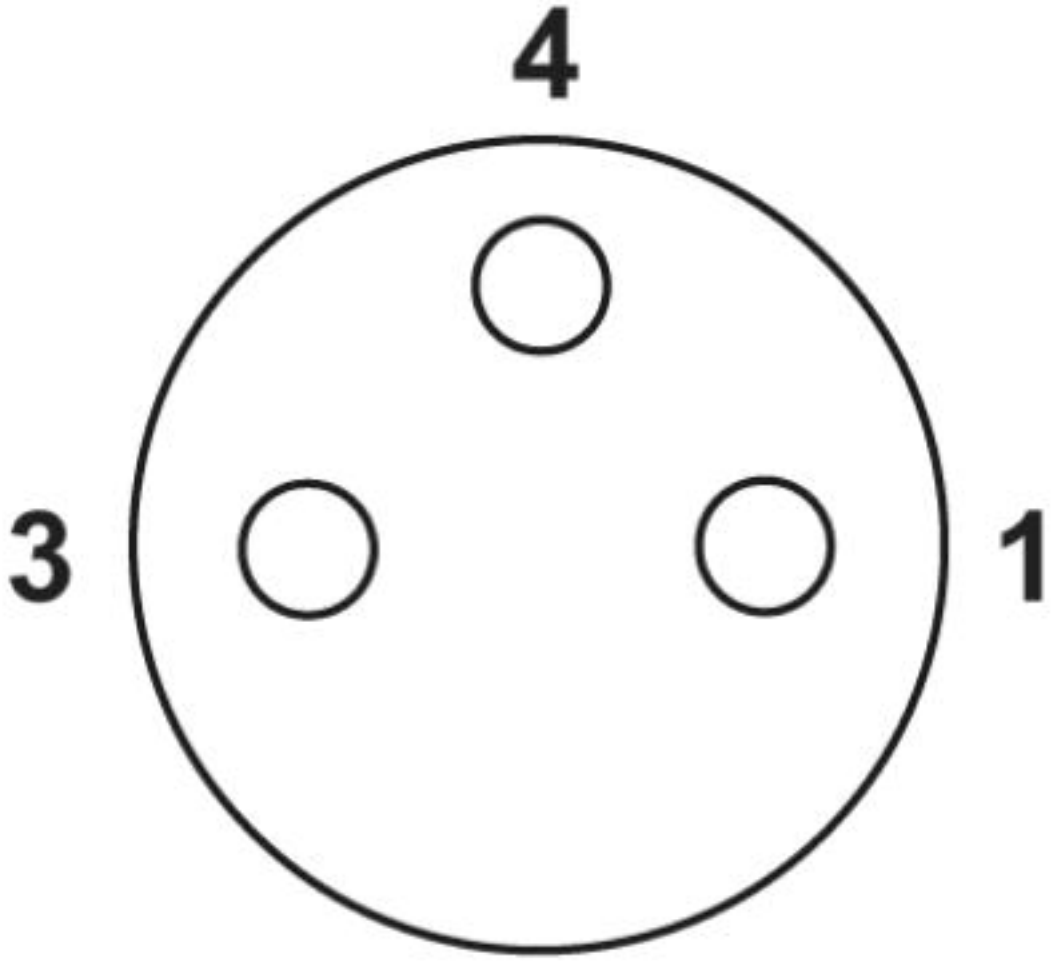

Pin assignment M8 socket, 3-pos., view female side

Sensor/Actuator cable - SAC-3P-M12MR/1,5-PUR/M 8FS - 1668894

Cable cross section

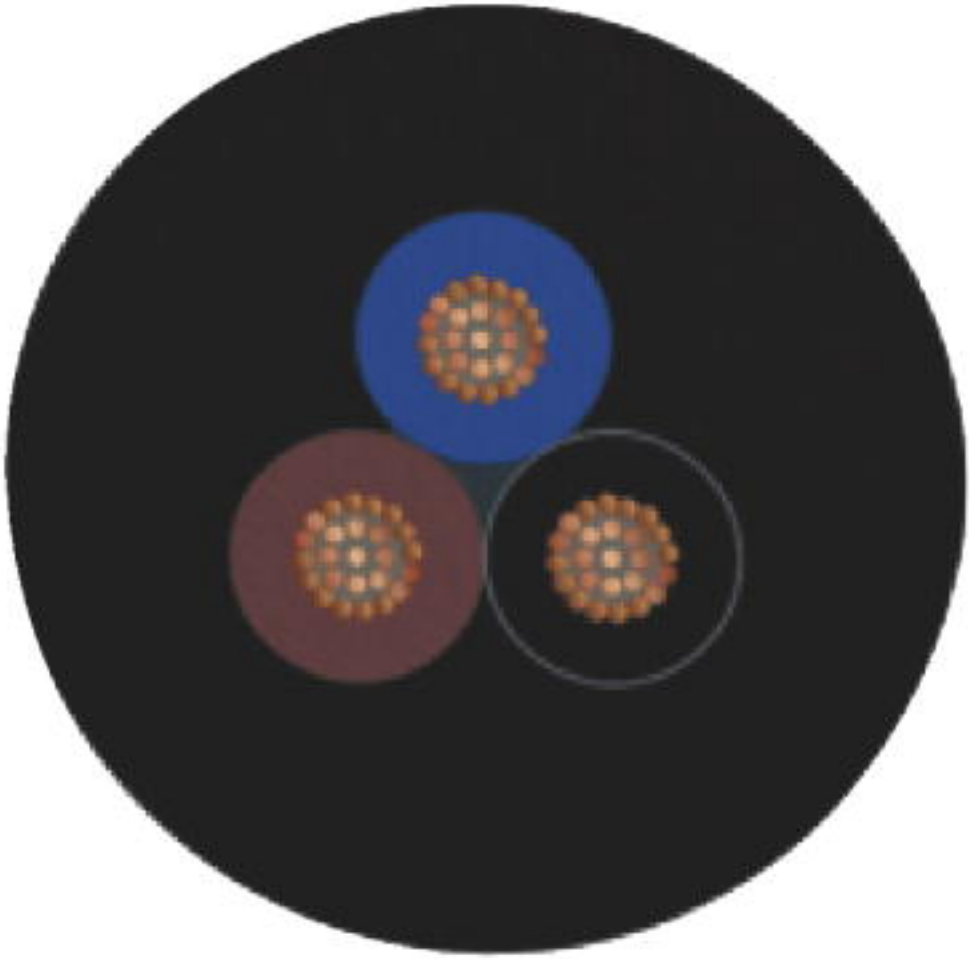

PUR halogen-free black [PUR]

© Phoenix Contact 2013 - all rights reserved
http://www.phoenixcontact.com