Bus system cable - SAC-5P-M12MSB/ 2,0-900/M12FSB - 1507191

Please be informed that the data shown in this PDF Document is generated from our Online Catalog. Please find the complete data in the user's documentation. Our General Terms of Use for Downloads are valid (http://download.phoenixcontact.com)



Bus system cable, INTERBUS, INTERBUS, 5-position, PUR halogen-free, Green RAL 6017, shielded, Plug straight M12, B-coded, on Socket straight M12, B-coded, Cable length: 2 m

Key commercial data

package_quantity	1
GTIN	4017918900045

Technical data

Dimensions

Length of cable	2 m

Ambient conditions

Ambient temperature (operation)	-25 °C ... 90 °C (Plug / socket)
Degree of protection	IP65
Degree of protection	IP67

General

Rated current at 40°C	4 A
Rated voltage	60 V
Number of positions	5
Contact resistance	≤ 5 mΩ
Insulation resistance	≥ 100 MΩ
Coding	B - inverse
Signal type/category	INTERBUS
Status display	No
Surge voltage category	II
Pollution degree	3
Insertion/withdrawal cycles	≥ 100
Torque	0.4 Nm (M12 connector)

Material

Inflammability class according to UL 94	V0
Contact material	CuSn

Bus system cable - SAC-5P-M12MSB/ 2,0-900/M12FSB - 1507191

Technical data

Material

Contact surface material	Ni/Au
Contact carrier material	PA 66
Material of grip body	TPU, hardly inflammable, self-extinguishing
Material, knurls	Zinc die-cast, nickel-plated
Sealing material	NBR

Pin assignment

Position = wire color (signal) = position (optional)	1 (Plug) = YE (DO) = 1 (Socket)
Position = wire color (signal) = position (optional)	2 (Plug) = GN (DO) = 2 (Socket)
Position = wire color (signal) = position (optional)	3 (Plug) = GY (DI) = 3 (Socket)
Position = wire color (signal) = position (optional)	4 (Plug) = PK (DI) = 4 (Socket)
Position = wire color (signal) = position (optional)	5 (Plug) = BN (GND) = 5 (Socket)

Cable

Cable type	INTERBUS
Cable type (abbreviation)	900
Conductor cross section	0.22 mm²
AWG signal line	24
Conductor structure signal line	32x 0.10 mm
Wire colors	Green-yellow, white-brown, gray-pink
Twisted pairs	2 cores to the pair
Overall twist	3 pairs to the core
Shielding	Braided copper wires
External sheath, color	Green RAL 6017
External cable diameter	8.00 mm
Smallest bending radius, fixed installation	60 mm
Smallest bending radius, movable installation	120 mm
Number of bending cycles	5000000
Bending radius	120 mm
Traversing path	10 m
Traversing rate	1.6 m/s
Acceleration	3.2 m/s²
Outer sheath, material	PUR
Material conductor insulation	PE
Conductor material	Bare Cu litz wires
Insulation resistance	> 5 GΩ*km
Conductor resistance	≤ 159.8 mΩ/m
Working capacitance	60 nF (At 800 Hz)
Signal speed	0.66 c
Coupling resistance	250000.00 MΩ/km (At 30 MHz)
Nominal voltage, cable	250 V
Test voltage Core/Core	1500 V

Bus system cable - SAC-5P-M12MSB/ 2,0-900/M12FSB - 1507191

Technical data

Cable

Test voltage Core/Shield	1000 V
Flame resistance	IEC 60332-1
Ambient temperature (operation)	-40 °C ... 80 °C (cable, fixed installation)
Ambient temperature (operation)	-30 °C ... 70 °C (cable, flexible installation)

classifications

eCl@ss

eCl@ss 4.0	27060306
eCl@ss 4.1	27060306
eCl@ss 5.0	27061801
eCl@ss 5.1	27061801
eCl@ss 6.0	27061801
eCl@ss 7.0	27061801
eCl@ss 8.0	27061801

ETIM

ETIM 2.0	EC000830
ETIM 3.0	EC001855
ETIM 4.0	EC001855
ETIM 5.0	EC001855

UNSPSC

UNSPSC 6.01	31251501
UNSPSC 7.0901	31251501
UNSPSC 11	31251501
UNSPSC 12.01	31251501
UNSPSC 13.2	31251501

approvals

GOST / GOST /

Approval details

GOST

Bus system cable - SAC-5P-M12MSB/ 2,0-900/M12FSB - 1507191

Drawings

Dimensioned drawing

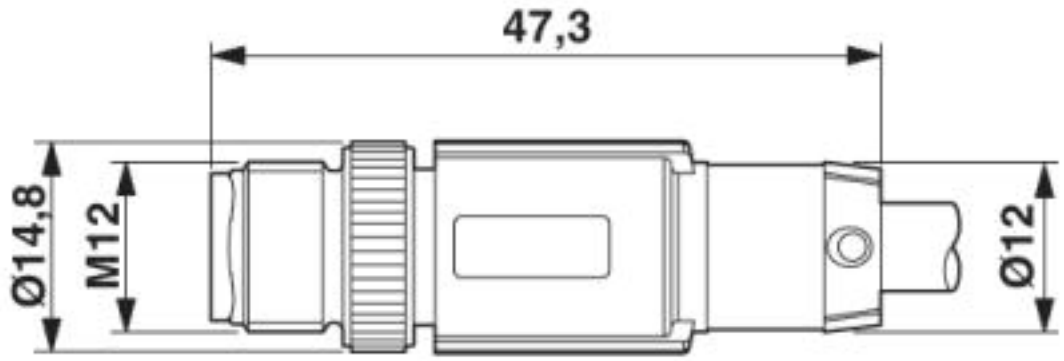

Plug, M12 x 1, straight, shielded

Dimensioned drawing

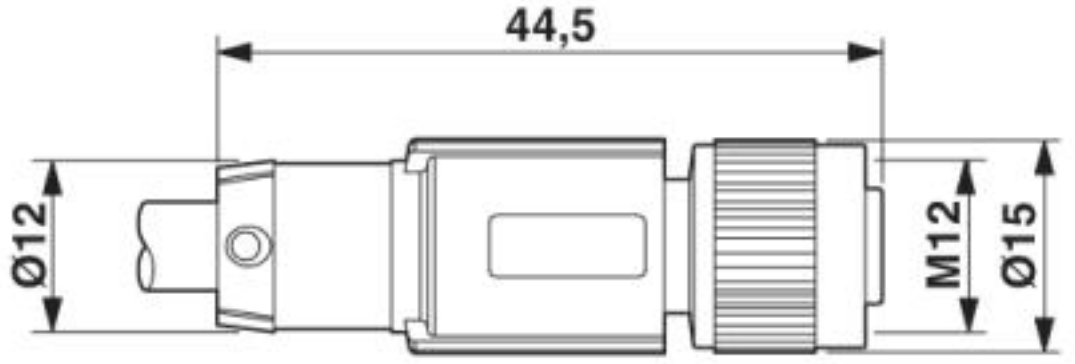

M12 x 1 socket, straight, shielded

Bus system cable - SAC-5P-M12MSB/ 2,0-900/M12FSB - 1507191

Circuit diagram

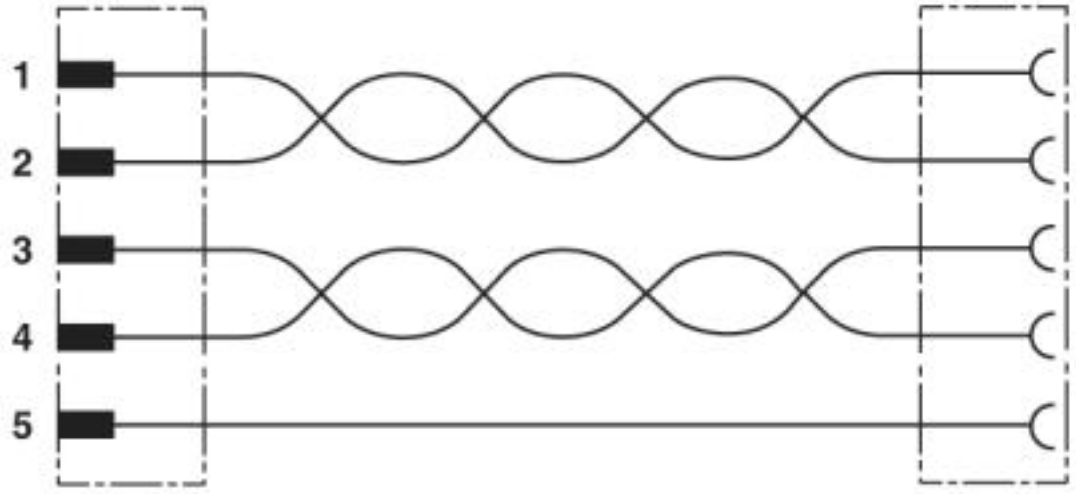

Contact assignment of the M12 connector and the M12 socket

Bus system cable - SAC-5P-M12MSB/ 2,0-900/M12FSB - 1507191

Schematic diagram

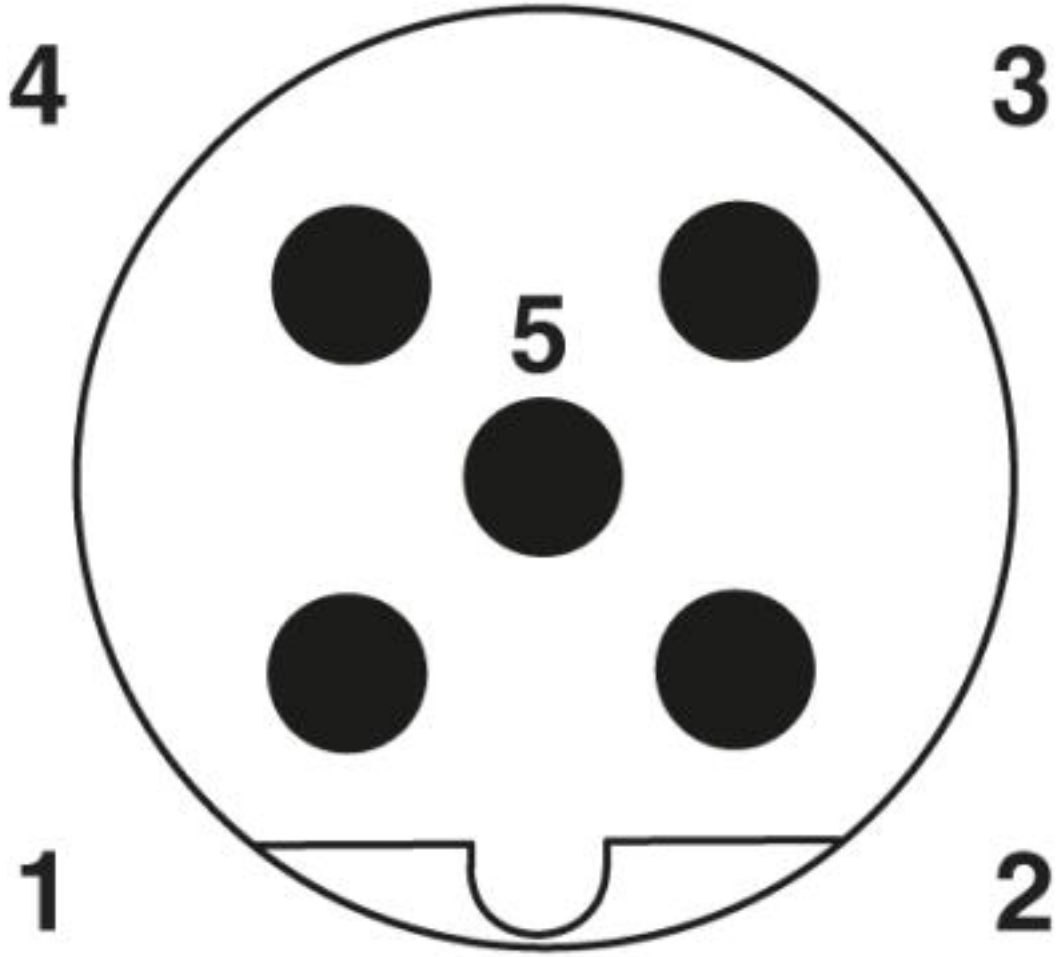

Pin assignment M12 male connector, 5-pos., B-coded, male side

Bus system cable - SAC-5P-M12MSB/ 2,0-900/M12FSB - 1507191

Schematic diagram

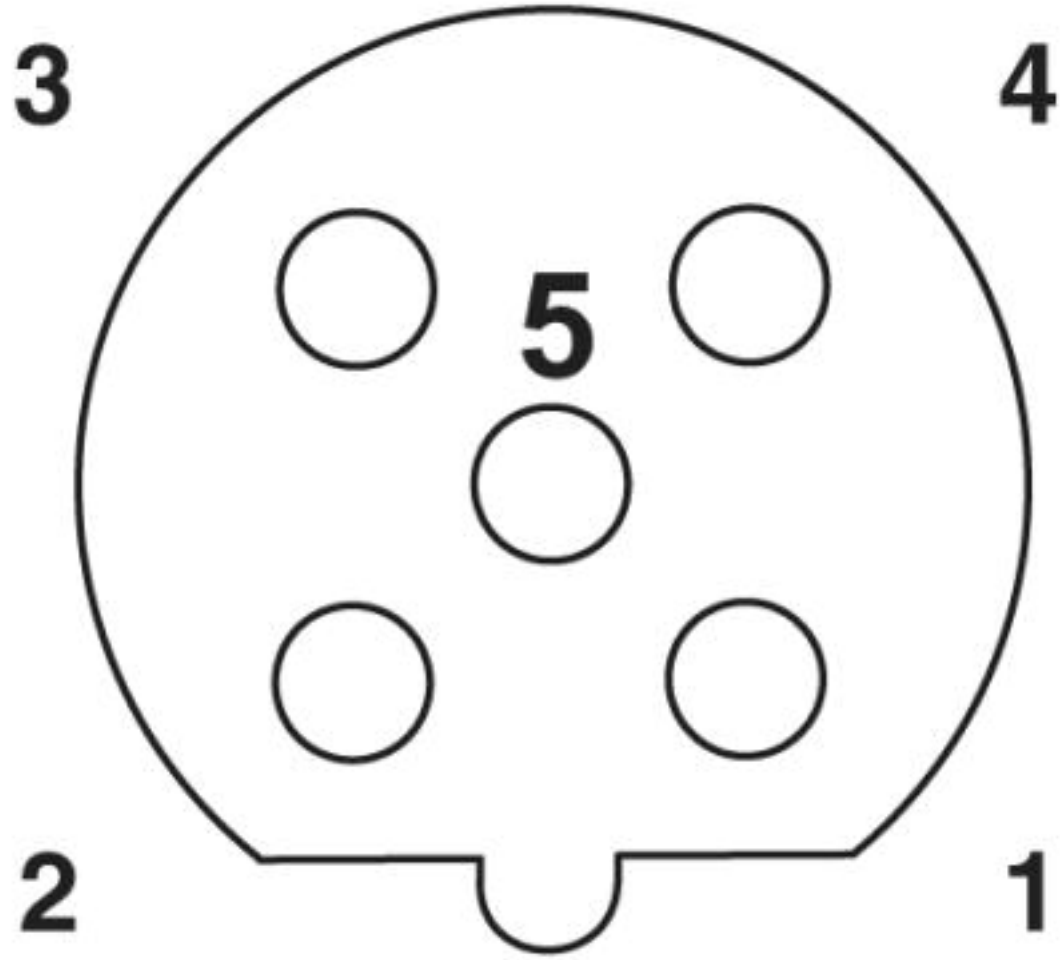

Pin assignment M12 socket, 5-pos., B-coded, female side

Bus system cable - SAC-5P-M12MSB/ 2,0-900/M12FSB - 1507191

Cable cross section

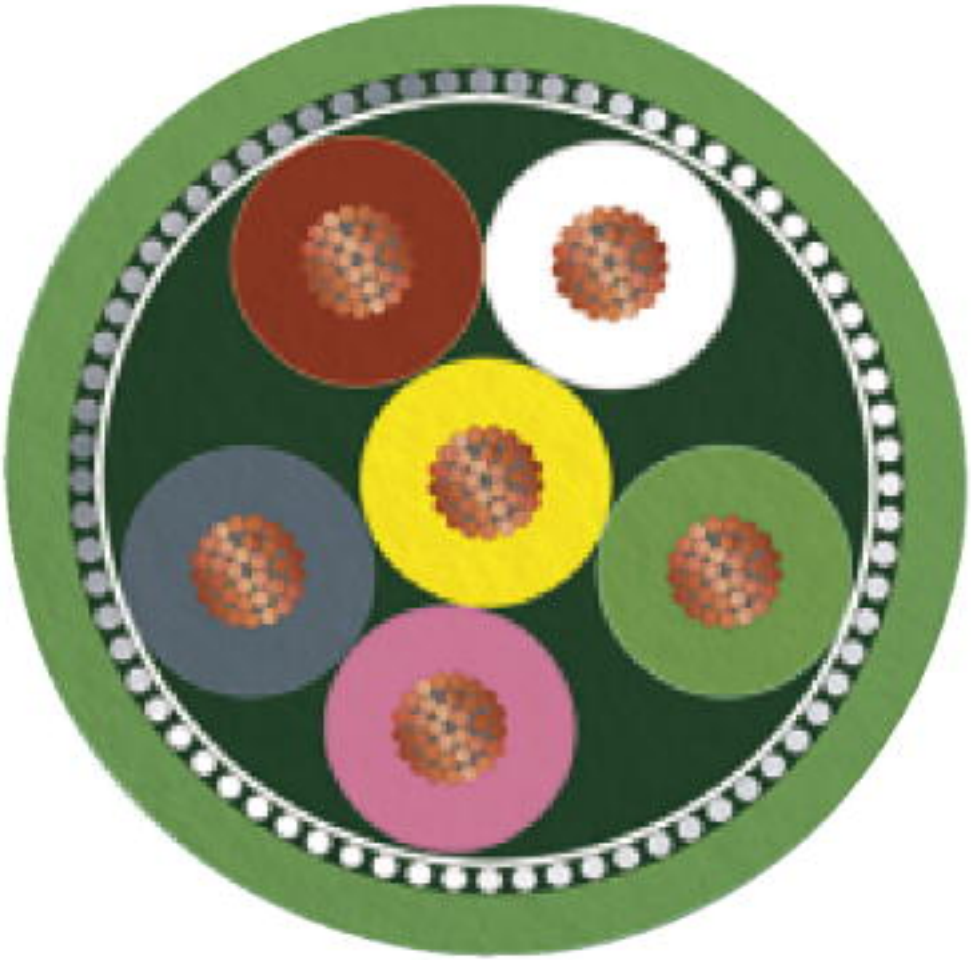

INTERBUS [900]

© Phoenix Contact 2013 - all rights reserved
http://www.phoenixcontact.com