Bus system T-connector - SAC-4P-M12T/2XM12 CCL - 1559783

Please be informed that the data shown in this PDF Document is generated from our Online Catalog. Please find the complete data in the user's documentation. Our General Terms of Use for Downloads are valid (http://download.phoenixcontact.com)



Bus system T connector, 4-pos., CC-Link, M12 socket on M12 socket and M12 plug

CC-Link

Key commercial data

package_quantity	5
GTIN	4046356322164

Technical data

Ambient conditions

Ambient temperature (operation)	-25 °C ... 90 °C
Degree of protection	IP65
Degree of protection	IP67
Degree of protection	IP68

General

Rated current at 40°C	4 A
Rated voltage	60 V
Number of positions	4
Contact resistance	≤ 5 mΩ
Insulation resistance	≥ 100 MΩ
Status display	No
Surge voltage category	II
Pollution degree	3
Insertion/withdrawal cycles	≥ 100

Material

Inflammability class according to UL 94	HB
Contact material	CuZn
Contact surface material	Ni/Au
Contact carrier material	TPU GF
Material of grip body	TPU, hardly inflammable, self-extinguishing
Material, knurls	Zinc die-cast, nickel-plated
Sealing material	NBR

Bus system T-connector - SAC-4P-M12T/2XM12 CCL - 1559783

classifications

eCl@ss

eCl@ss 4.0	27060306
eCl@ss 4.1	27060306
eCl@ss 5.0	27061801
eCl@ss 5.1	27061801
eCl@ss 6.0	27061801
eCl@ss 7.0	27061801
eCl@ss 8.0	27061801

ETIM

ETIM 3.0	EC002062
ETIM 4.0	EC002062
ETIM 5.0	EC000830

UNSPSC

UNSPSC 6.01	31251501
UNSPSC 7.0901	31251501
UNSPSC 11	31251501
UNSPSC 12.01	31251501
UNSPSC 13.2	31251501

approvals

GOST /

Approval details

GOST

Drawings

Bus system T-connector - SAC-4P-M12T/2XM12 CCL - 1559783

Dimensioned drawing

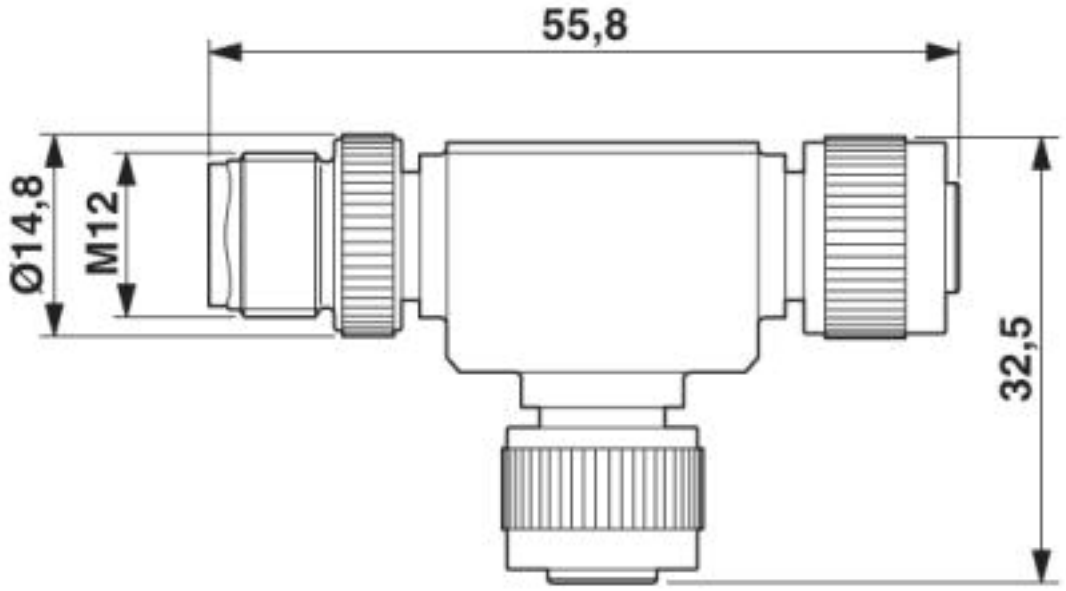

M12 T-distributor

Circuit diagram

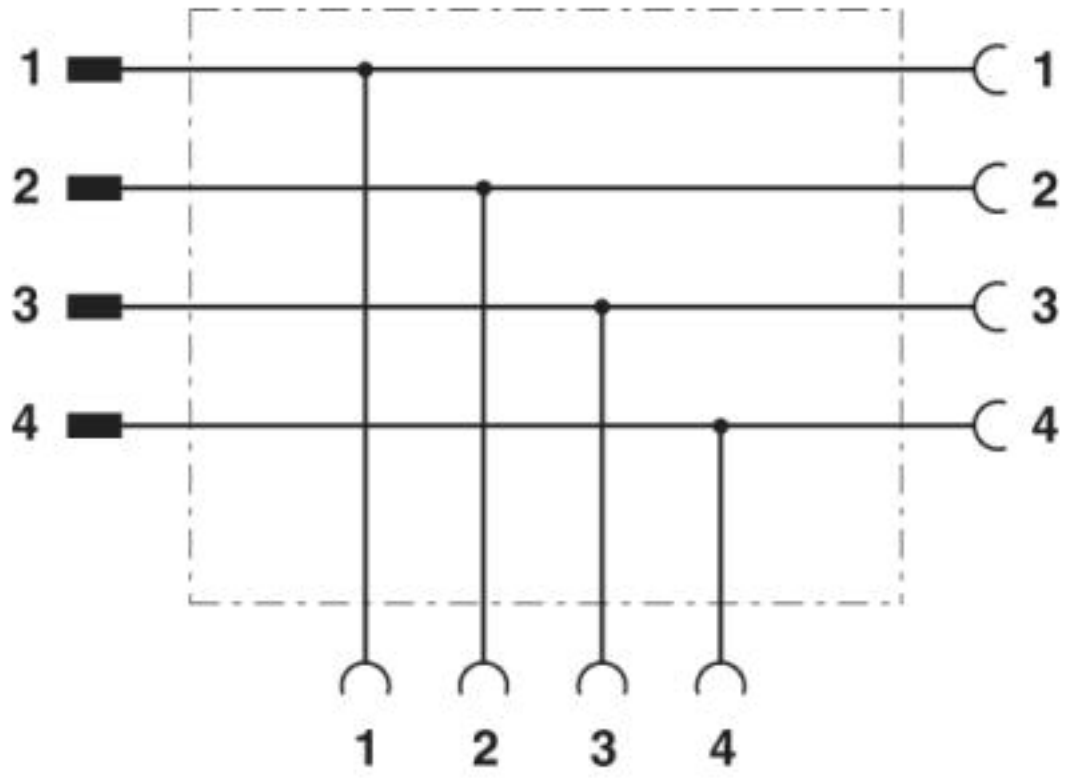

Contact assignment of the M12 T distributor

Bus system T-connector - SAC-4P-M12T/2XM12 CCL - 1559783

Schematic diagram

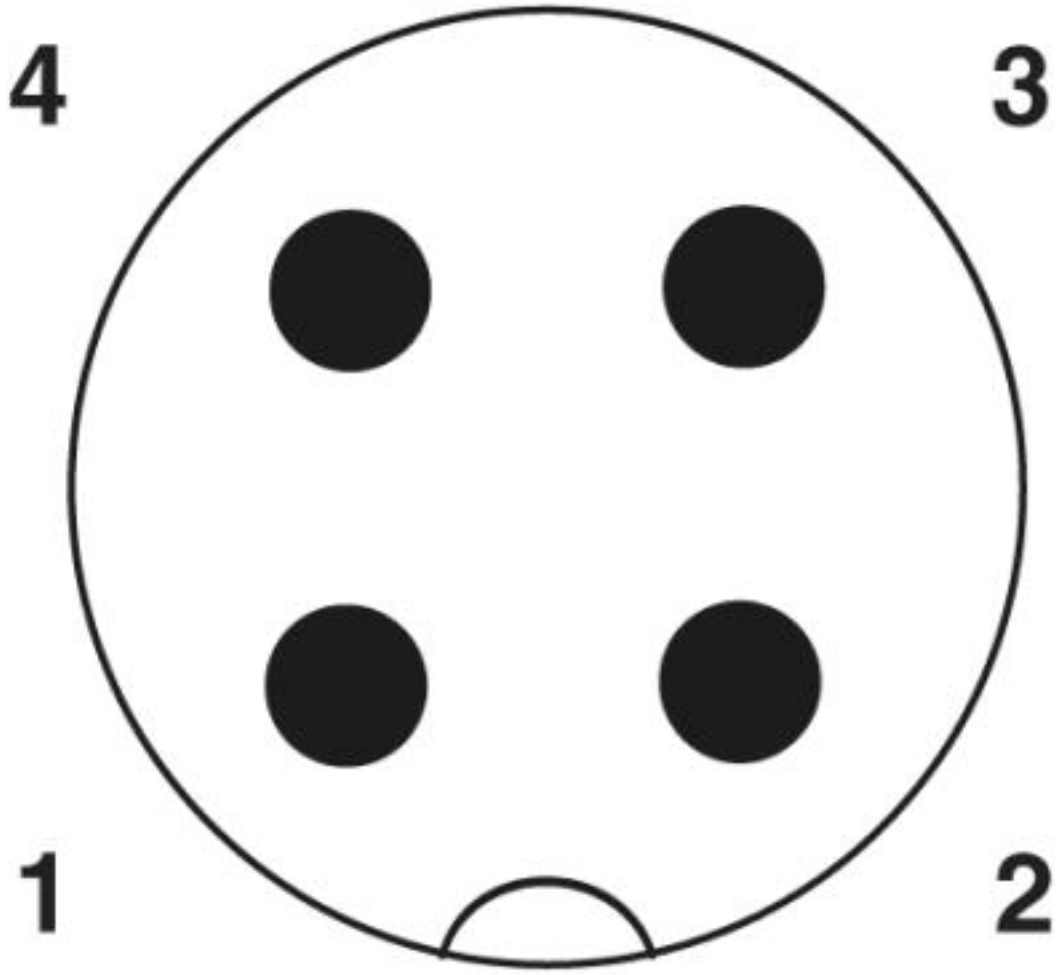

Pin assignment M12 plug, 4-pos., A-coded, view plug side

Bus system T-connector - SAC-4P-M12T/2XM12 CCL - 1559783

Schematic diagram

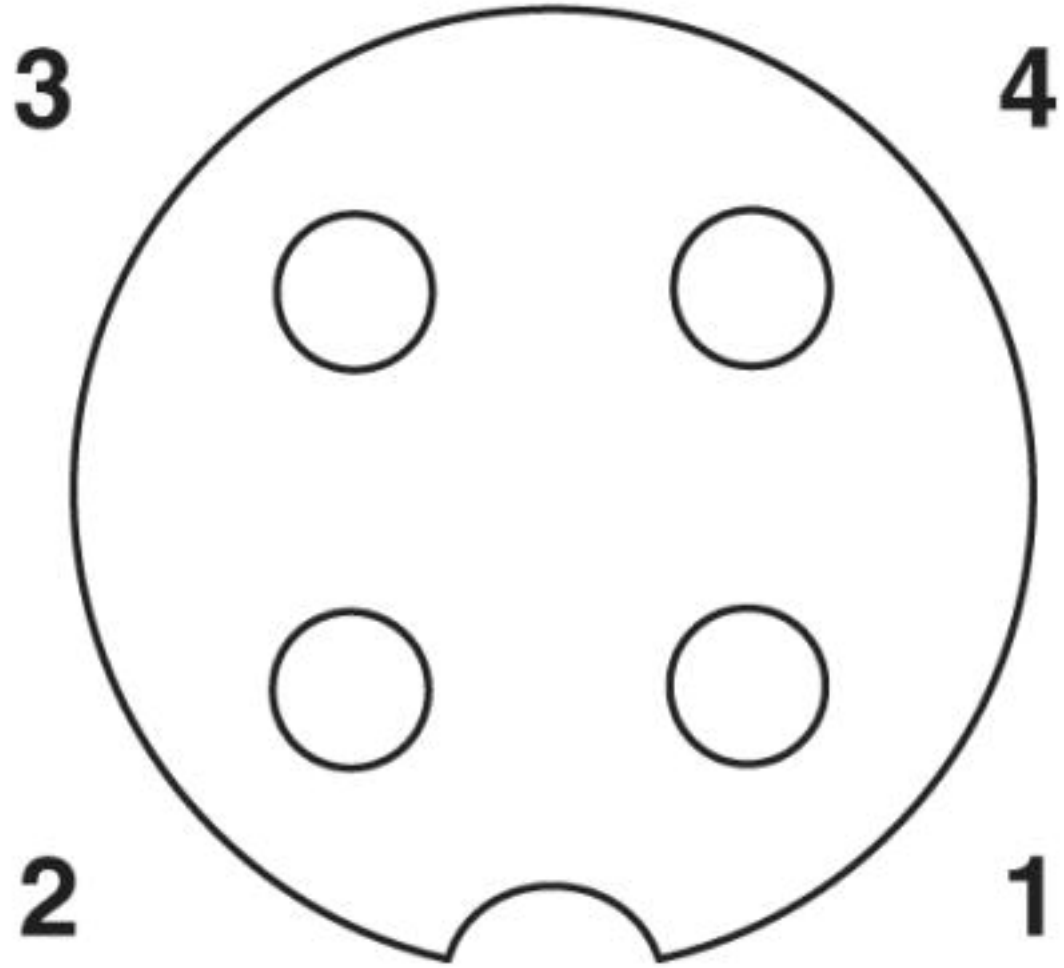

Pin assignment M12 socket, 4-pos., A-coded, view female side

Bus system T-connector - SAC-4P-M12T/2XM12 CCL - 1559783

Schematic diagram

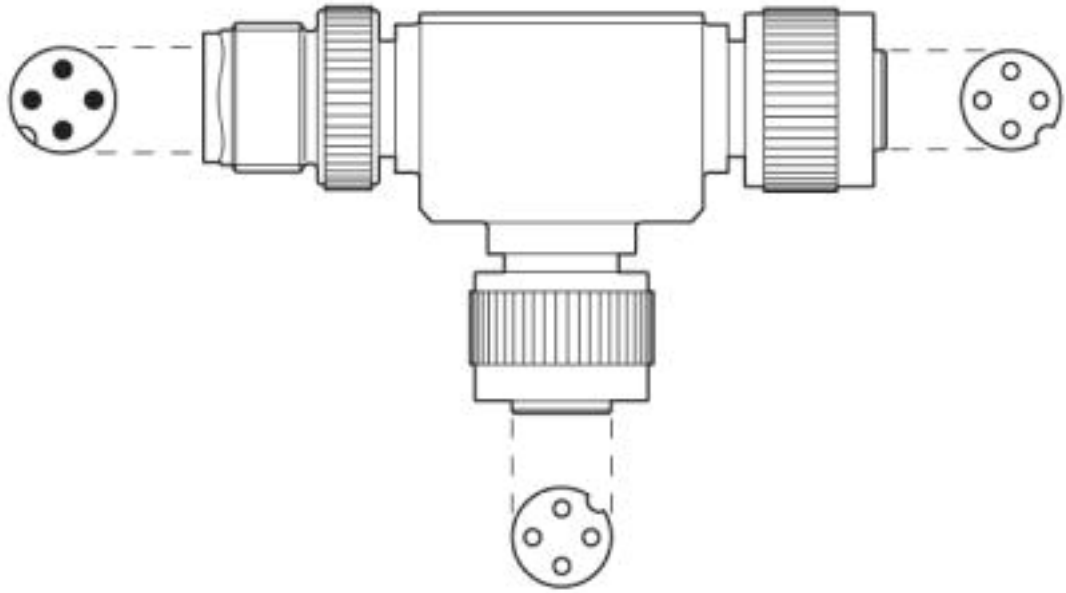

Layout of connector pin assignments

© Phoenix Contact 2013 - all rights reserved
http://www.phoenixcontact.com