PCB terminal block - SPT 2,5/10-V-5,0 - 1991176

Please be informed that the data shown in this PDF Document is generated from our Online Catalog. Please find the complete data in the user's documentation. Our General Terms of Use for Downloads are valid (http://download.phoenixcontact.com)

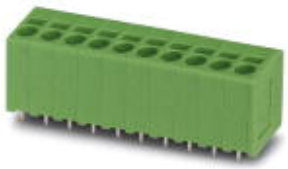

PCB terminal block, Nominal current: 24 A, Nom. voltage: 400 V, Pitch: 5 mm, Number of positions: 10, Connection method: Spring-cage conn., Mounting: Soldering, Conductor/PCB connection direction: 90 °, Color: green

Product Features

- Can be combined with 3.5 mm pitch
- Larger numbers of positions available on request
- Horizontal and vertical types
- 5.0 mm pitch
- PCB terminal blocks with front spring-cage connection
- Two solder pins for a high level of stability on the PCB
- Generously dimensioned connection cross section of up to 2.5 mm²
- When connecting stranded conductors without ferrules, the terminal point is opened using a standard screwdriver
- Push-in direct plug-in technology for solid or stranded conductors with ferrules

Key commercial data

package_quantity	50
GTIN	4046356104791

Technical data

Dimensions

Length	13.5 mm
Pitch	5 mm
Dimension a	45 mm
Pin dimensions	0,8 x 0,8 mm
Pin spacing	5 mm
Hole diameter	1.1 mm

General

Range of articles	SPT 2,5/..-V
Insulating material group	I
Rated surge voltage (III/3)	4 kV
Rated surge voltage (III/2)	4 kV
Rated surge voltage (II/2)	4 kV
Rated voltage (III/3)	250 V
Rated voltage (III/2)	400 V

PCB terminal block - SPT 2,5/10-V-5,0 - 1991176

Technical data

General

Rated voltage (II/2)	630 V
Connection in acc. with standard	EN-VDE
Nominal current I_N	24 A
Nominal cross section	2.5 mm²
Maximum load current	24 A
Insulating material	PA
Solder pin surface	Sn
Inflammability class according to UL 94	V0
Internal cylindrical gage	A3
Stripping length	10 mm
Number of positions	10

Connection data

Conductor cross section solid min.	0.2 mm²
Conductor cross section solid max.	4 mm²
Conductor cross section stranded min.	0.2 mm²
Conductor cross section stranded max.	2.5 mm²
Conductor cross section stranded, with ferrule without plastic sleeve min.	0.25 mm² Stripping length 8 mm
Conductor cross section stranded, with ferrule without plastic sleeve max.	2.5 mm² Stripping length 8 mm
Conductor cross section stranded, with ferrule with plastic sleeve min.	0.25 mm² Stripping length 8 mm
Conductor cross section stranded, with ferrule with plastic sleeve max.	1.5 mm² Stripping length 8 mm
Conductor cross section AWG/kcmil min.	24
Conductor cross section AWG/kcmil max	12
Minimum AWG according to UL/CUL	24
Maximum AWG according to UL/CUL	12

classifications

eCl@ss

eCl@ss 4.0	27141109
eCl@ss 4.1	27141109
eCl@ss 5.0	27141190
eCl@ss 5.1	27141190
eCl@ss 6.0	27261101
eCl@ss 7.0	27440401
eCl@ss 8.0	27440401

ETIM

ETIM 3.0	EC001121
ETIM 4.0	EC002643

PCB terminal block - SPT 2,5/10-V-5,0 - 1991176

classifications

ETIM

ETIM 5.0	EC002643

UNSPSC

UNSPSC 6.01	30211801
UNSPSC 7.0901	39121432
UNSPSC 11	39121432
UNSPSC 12.01	39121432
UNSPSC 13.2	39121432

approvals

UL Recognized / SEV / cUL Recognized / CCA / IECEE CB Scheme / GOST / GOST / cULus Recognized /

Approval details

UL Recognized

Usegroups	**B**	**D**
Nominal voltage UN	300 V	300 V
Nominal current IN	20 A	10 A
mm²/AWG/kcmil	24-12	24-12

SEV	
Nominal voltage UN	250 V
Nominal current IN	24 A
mm²/AWG/kcmil	2.5

cUL Recognized

Usegroups	**B**	**D**
Nominal voltage UN	300 V	300 V
Nominal current IN	20 A	10 A
mm²/AWG/kcmil	24-12	24-12

CCA	
Nominal voltage UN	250 V
Nominal current IN	24 A
mm²/AWG/kcmil	2.5

PCB terminal block - SPT 2,5/10-V-5,0 - 1991176

approvals

IECEE CB Scheme

Nominal voltage UN	250 V
Nominal current IN	24 A
mm²/AWG/kcmil	2.5

GOST

cULus Recognized

Drawings

PCB terminal block - SPT 2,5/10-V-5,0 - 1991176

Drilling diagram

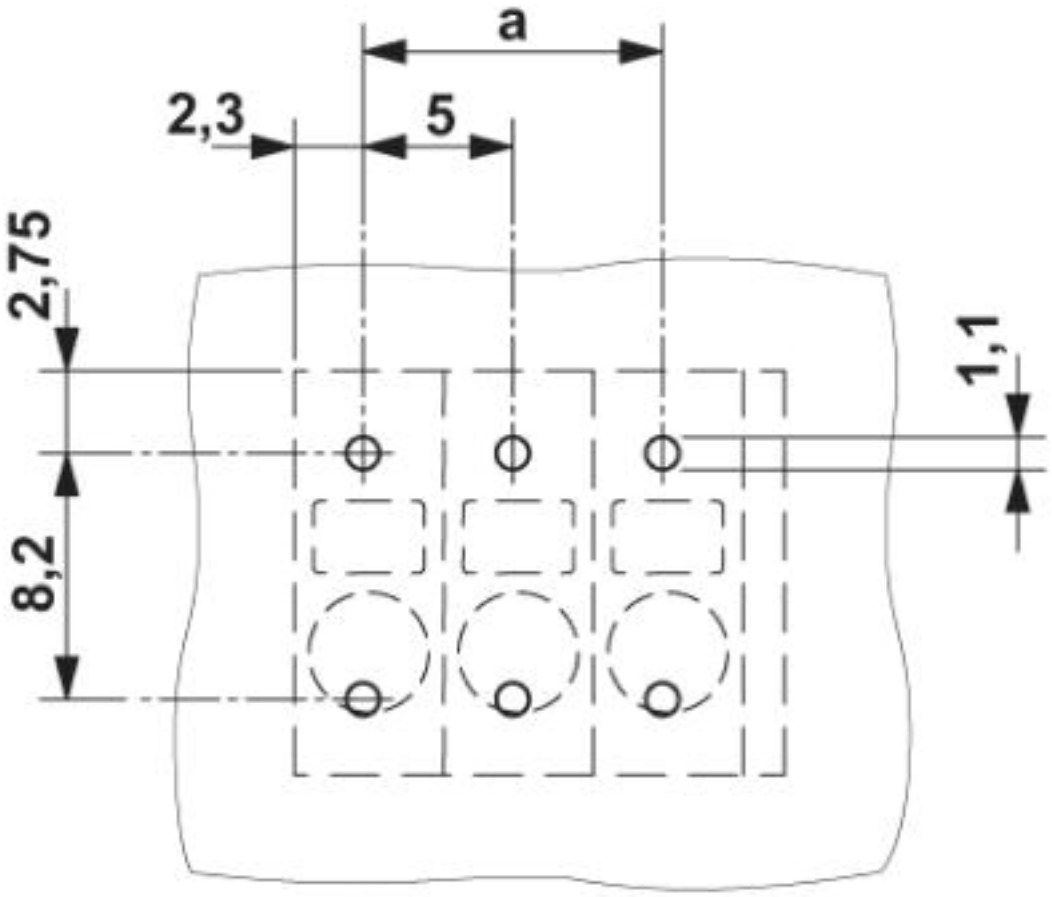

PCB terminal block - SPT 2,5/10-V-5,0 - 1991176

Dimensioned drawing

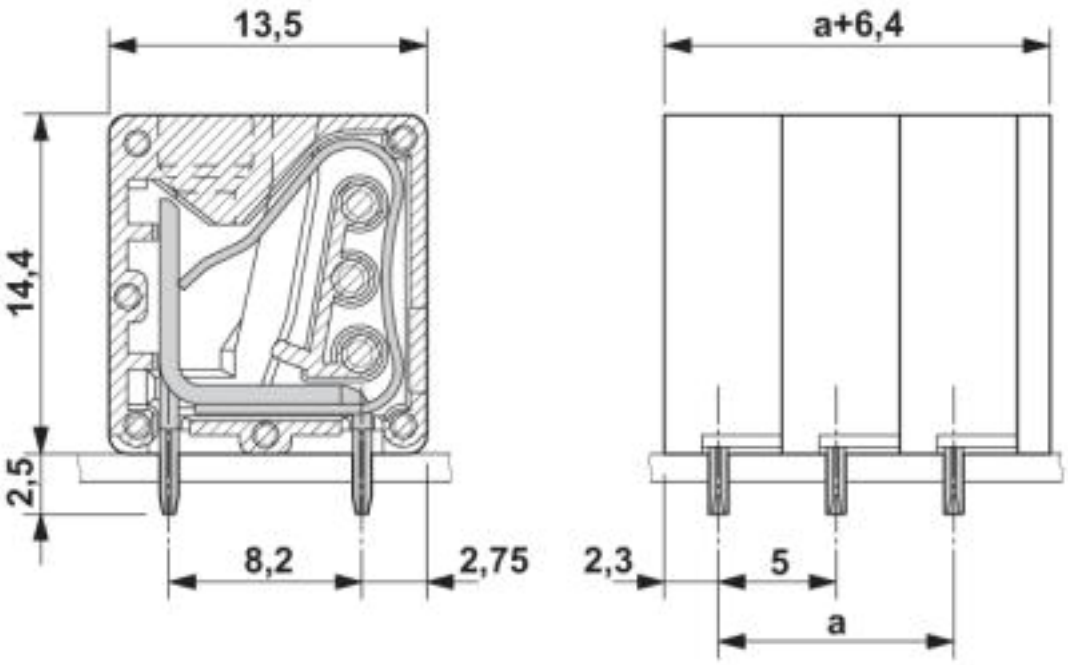

© Phoenix Contact 2013 - all rights reserved
http://www.phoenixcontact.com