PCB terminal block - KDS - 1701023

Please be informed that the data shown in this PDF Document is generated from our Online Catalog. Please find the complete data in the user's documentation. Our General Terms of Use for Downloads are valid (http://download.phoenixcontact.com)



The illustration shows a combination as a 15-position version

PCB terminal block, Nominal current: 17.5 A, Nom. voltage: 400 V, Pitch: 5 mm, Number of positions: 1, Connection method: Screw connection, Mounting: Soldering, Conductor/PCB connection direction: 0 °, Color: green, The article can be aligned to create different nos. of positions!

Key commercial data

package_quantity	50
GTIN	4017918022945

Technical data

Dimensions

Length	18.6 mm
Pitch	5 mm
Pin dimensions	1,1 x 0,8 mm
Hole diameter	1.4 mm

General

Range of articles	KDS
Insulating material group	I
Rated surge voltage (III/3)	4 kV
Rated surge voltage (III/2)	4 kV
Rated surge voltage (II/2)	4 kV
Rated voltage (III/3)	250 V
Rated voltage (III/2)	400 V
Rated voltage (II/2)	630 V
Connection in acc. with standard	EN-VDE
Nominal current I_N	17.5 A
Nominal cross section	1.5 mm²
Maximum load current	24 A (with 2.5 mm² conductor cross section)
Insulating material	PA
Solder pin surface	Sn
Inflammability class according to UL 94	V2
Stripping length	10 mm
Number of positions	1

PCB terminal block - KDS - 1701023

Technical data

General

Screw thread	M2,6
Tightening torque, min	0.4 Nm
Tightening torque max	0.5 Nm

Connection data

Conductor cross section solid min.	0.14 mm²
Conductor cross section solid max.	2.5 mm²
Conductor cross section stranded min.	0.14 mm²
Conductor cross section stranded max.	1.5 mm²
Conductor cross section stranded, with ferrule without plastic sleeve min.	0.25 mm²
Conductor cross section stranded, with ferrule without plastic sleeve max.	1 mm²
Conductor cross section stranded, with ferrule with plastic sleeve min.	0.25 mm²
Conductor cross section stranded, with ferrule with plastic sleeve max.	1 mm²
Conductor cross section AWG/kcmil min.	26
Conductor cross section AWG/kcmil max	14
2 conductors with same cross section, solid min.	0.14 mm²
2 conductors with same cross section, solid max.	0.75 mm²
2 conductors with same cross section, stranded min.	0.14 mm²
2 conductors with same cross section, stranded max.	0.5 mm²
Minimum AWG according to UL/CUL	30
Maximum AWG according to UL/CUL	14

classifications

eCl@ss

eCl@ss 4.0	27141109
eCl@ss 4.1	27141109
eCl@ss 5.0	27141190
eCl@ss 5.1	27141190
eCl@ss 6.0	27261101
eCl@ss 7.0	27440401
eCl@ss 8.0	27440401

ETIM

ETIM 3.0	EC001121
ETIM 4.0	EC002643
ETIM 5.0	EC002643

UNSPSC

UNSPSC 6.01	30211801
UNSPSC 7.0901	39121432

PCB terminal block - KDS - 1701023

classifications

UNSPSC

UNSPSC 11	39121432
UNSPSC 12.01	39121432
UNSPSC 13.2	39121432

approvals

CSA / UL Recognized / SEV / GOST / CCA /

Approval details

CSA

Usegroups	**B**	**C**
Nominal voltage UN	300 V	50 V
Nominal current IN	10 A	10 A
mm²/AWG/kcmil	24-12	24-12

UL Recognized

Usegroups	**B**	**C**
Nominal voltage UN	250 V	50 V
Nominal current IN	15 A	15 A
mm²/AWG/kcmil	30-14	30-14

SEV	
Nominal voltage UN	250 V
Nominal current IN	
mm²/AWG/kcmil	2.5

GOST

CCA	
Nominal voltage UN	250 V
Nominal current IN	
mm²/AWG/kcmil	2.5

PCB terminal block - KDS - 1701023

accessories

Pitch spacer

RZ 2,5 - 1701052



Bridge

EB 2- 5 - 1401158



EB 3- 5 - 1401145



Test plug terminal block

RPS - 0201647



MPS-MT - 0201744



PCB terminal block - KDS - 1701023

accessories

Screwdriver tools

SZS 0,6X3,5 - 1205053



Labeled terminal marker

SK 5/3,8:FORTL.ZAHLEN - 0804183



BNB-ZB 5,LGS:FORTL.ZAHLEN - 1400201



accessories

TP-KDS/GKDS - 1701793



Drawings

PCB terminal block - KDS - 1701023

Drilling diagram

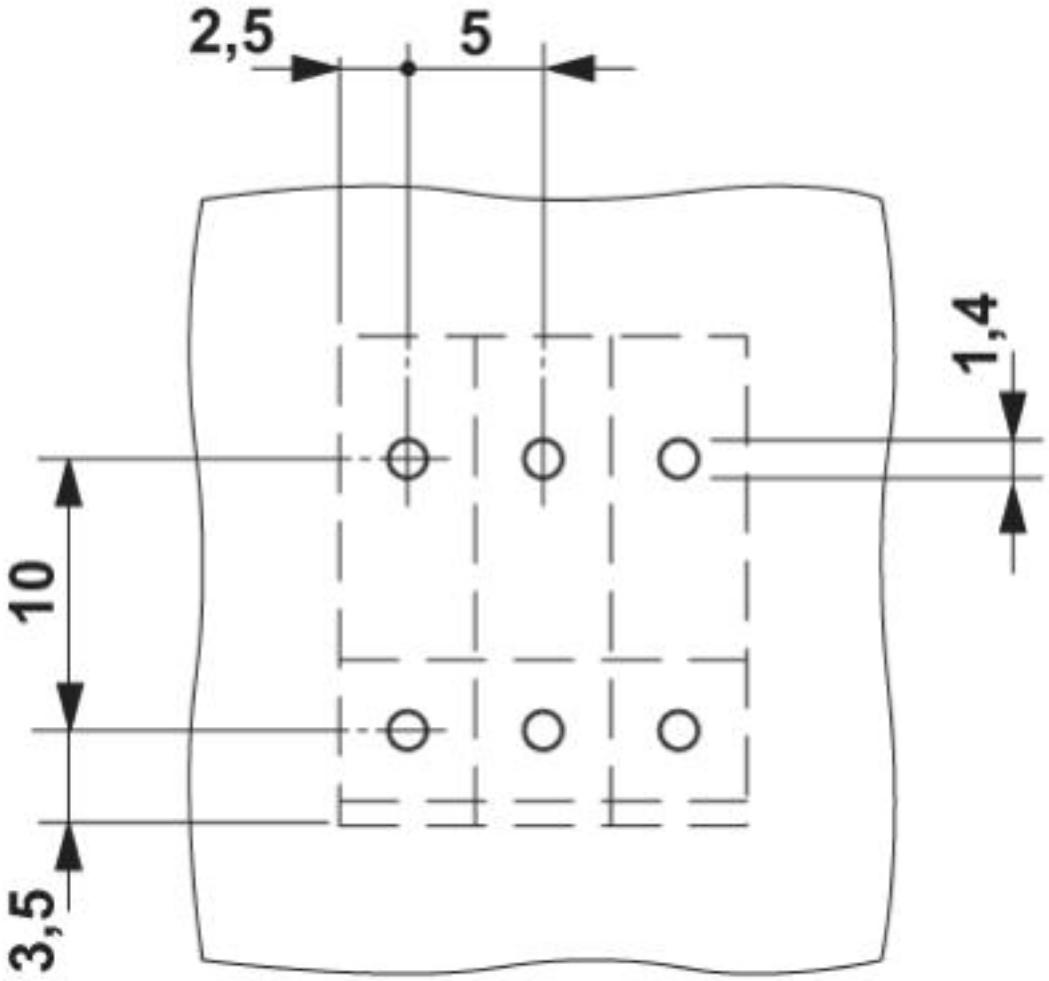

PCB terminal block - KDS - 1701023

Dimensioned drawing

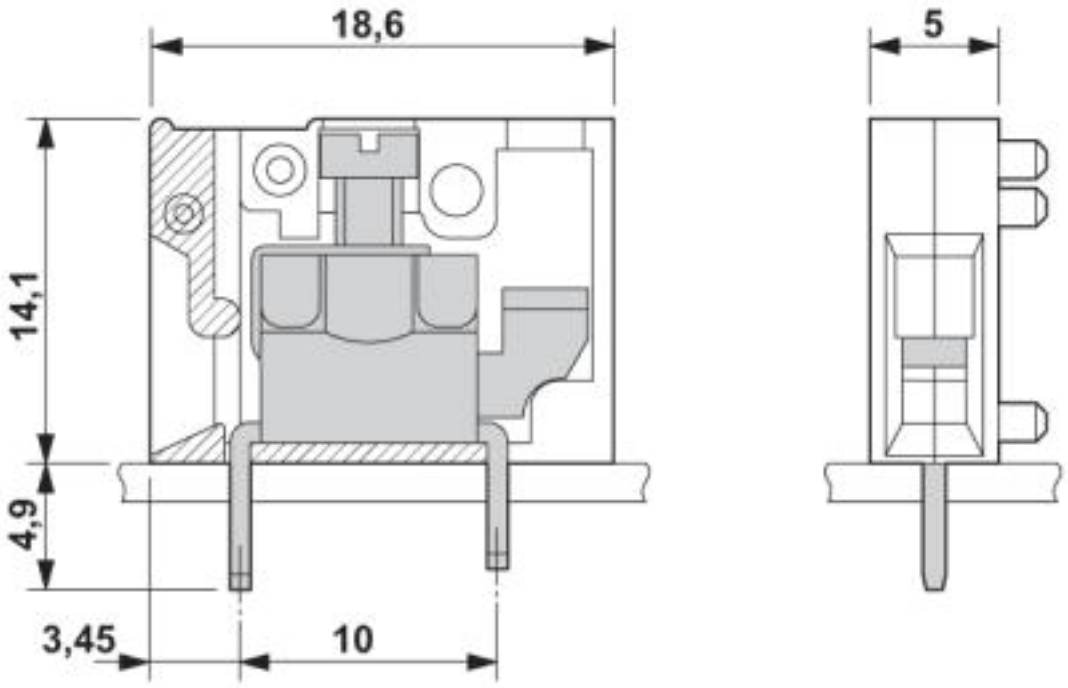

© Phoenix Contact 2013 - all rights reserved
http://www.phoenixcontact.com